Personal LaserWriter® LS Owner's Guide

Limited Warranty on Media and Replacement

If you discover physical defects in the manuals distributed with an Apple product or in the media on which a software product is distributed, Apple will replace the media or manuals at no charge to you, provided you return the item to be replaced with proof of purchase to Apple or an authorized Apple dealer during the 90-day period after you purchased the software. In addition, Apple will replace damaged software media and manuals for as long as the software product is included in Apple's Media Exchange Program. While not an upgrade or update method, this program offers additional protection for two years or more from the date of your original purchase. See your authorized Apple dealer for program coverage and details. In some countries the replacement period may be different; check with your authorized Apple dealer.

ALL IMPLIED WARRANTIES ON THE MEDIA AND MANUALS, INCLUDING IMPLIED WARRANTIES OF MERCHANTABILITY AND FITNESS FOR A PARTICULAR PURPOSE, ARE LIMITED IN DURATION TO NINETY (90) DAYS FROM THE DATE OF THE ORIGINAL RETAIL PURCHASE OF THIS PRODUCT.

Even though Apple has tested the software and reviewed the documentation, **APPLE MAKES NO WARRANTY OR REPRESENTATION, EITHER EXPRESSED OR IMPLIED, WITH RESPECT TO SOFTWARE, ITS QUALITY, PERFORMANCE, MERCHANTABILITY, OR FITNESS FOR A PARTICULAR PURPOSE. AS A RESULT, THIS SOFTWARE IS SOLD "AS IS," AND YOU, THE PURCHASER, ARE ASSUMING THE ENTIRE RISK AS TO ITS QUALITY AND PERFORMANCE.**

IN NO EVENT WILL APPLE BE LIABLE FOR DIRECT, INDIRECT, SPECIAL, INCIDENTAL, OR CONSEQUENTIAL DAMAGES RESULTING FROM ANY DEFECT IN THE SOFTWARE OR ITS DOCUMENTATION, even if advised of the possibility of such damages. In particular, Apple shall have no liability for any programs or data stored in or used with Apple products, including the costs of recovering such programs or data.

THE WARRANTY AND REMEDIES SET FORTH ABOVE ARE EXCLUSIVE AND IN LIEU OF ALL OTHERS, ORAL OR WRITTEN, EXPRESSED OR IMPLIED. No Apple dealer, agent, or employee is authorized to make any modification, extension, or addition to this warranty.

Some states do not allow the exclusion or limitation of implied warranties or liability for incidental or consequential damages, so the above limitation or exclusion may not apply to you. This warranty gives you specific legal rights, and you may also have other rights which vary from state to state.

Warning

This equipment has been certified to comply with the limits for a Class B digital device, in accordance with the specifications in Part 15 of FCC rules. See instructions if interference to radio or television reception is suspected.

DOC Class B Compliance This digital apparatus does not exceed the Class B limits for radio noise emissions from digital apparatus set out in the radio interference regulations of the Canadian Department of Communications.

Observation des normes—Classe B Le présent appareil numérique n'émet pas de bruits radioélectriques dépassant les limites applicables aux appareils numériques de la Classe B prescrites dans les règlements sur le brouillage radioélectrique édictés par le Ministère des Communications du Canada.

Personal LaserWriter® LS Owner's Guide

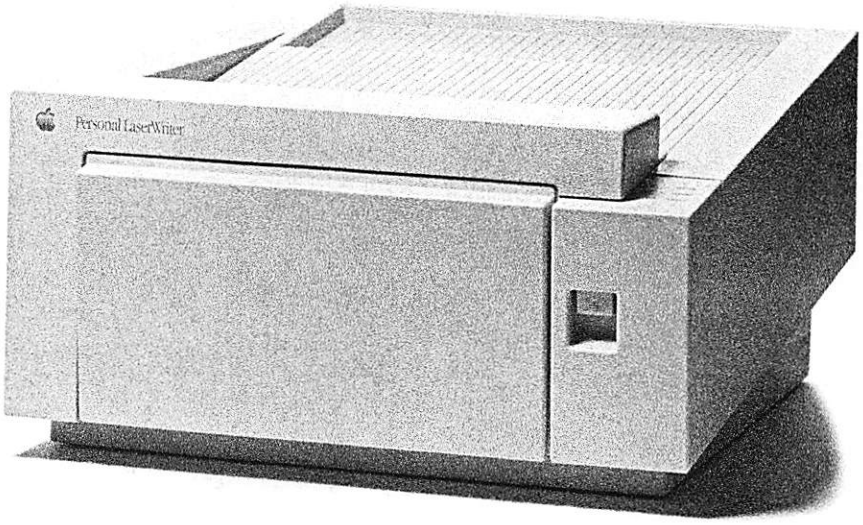

Apple Computer, Inc.

This manual and the software described in it are copyrighted, with all rights reserved. Under the copyright laws, this manual or the software may not be copied, in whole or part, without written consent of Apple, except in the normal use of the software or to make a backup copy of the software. The same proprietary and copyright notices must be affixed to any permitted copies as were affixed to the original. This exception does not allow copies to be made for others, whether or not sold, but all of the material purchased (with all backup copies) may be sold, given, or loaned to another person. Under the law, copying includes translating into another language or format.

You may use the software on any computer owned by you, but extra copies cannot be made for this purpose.

The Apple logo is a registered trademark of Apple Computer, Inc. Use of the "keyboard" Apple logo (Option-Shift-K) for commercial purposes without the prior written consent of Apple may constitute trademark infringement and unfair competition in violation of federal and state laws.

© Apple Computer, Inc., 1991
20525 Mariani Avenue
Cupertino, CA 95014-6299
(408) 996-1010

APDA, Apple, the Apple logo, AppleLink, AppleTalk, EtherTalk, ImageWriter, LaserWriter, Macintosh, and MultiFinder are registered trademarks of Apple Computer, Inc.

AppleCare is a registered service mark of Apple Computer, Inc.

Finder, QuickDraw, and TrueType are trademarks of Apple Computer, Inc.

Adobe and PostScript are registered trademarks, and Adobe Garamond and Adobe Illustrator 88 are trademarks, of Adobe Systems Incorporated.

Helvetica, Linotronic, and Times are registered trademarks of Linotype Co.

ITC Zapf Dingbats is a registered trademark of International Typeface Corporation.

MacPaint is a registered trademark of Claris Corporation.

Microsoft is a registered trademark of Microsoft Corporation.

QMS is a registered trademark, and ColorScript is a trademark, of QMS, Inc.

QuarkXPress is a registered trademark of Quark, Inc.

Simultaneously published in the United States and Canada.

Chapter 1 Setting Up the Personal LaserWriter LS 1

Chapter 2 Installing Printer Software 13

Chapter 3 Printing Documents 23

Chapter 4 Maintenance 43

Chapter 5 Troubleshooting 51

Contents

Radio and television interference x

Preface Welcome to the Personal LaserWriter LS Printer xi

How to use this manual xii
About the Personal LaserWriter LS xiii
Important safety instructions xiv
Watch for these situations and if one occurs pull the plug! xv

Chapter 1 Setting Up the Personal LaserWriter LS 1

Choosing a location for the LaserWriter 2
Do you have what you need? 3
Opening the LaserWriter 4
Installing the toner cartridge 5
Loading paper into the multipurpose tray 8
Connecting the printer to your Macintosh 10
Plugging in and turning on the LaserWriter 11

Chapter 2 Installing Printer Software 13

Before beginning 14
Protecting your disks 14
Checking the version of your system software 14
What to do if you need to upgrade system software 16
Installing the printer files 16
An important step: Choosing the printer 18
Additional preparations 18
The Cleaning Page 18
The Font/DA Mover 19
Custom installations 20
TrueType fonts 20
How TrueType and fixed-size fonts work together 20
Determining which fonts are which 21
What next? 22

Chapter 3 Printing Documents 23

Choosing a printer 24
Defining your page setup 25
Printing from within a program 26
Printing from the Finder desktop 27
Using the multipurpose tray 28
Opening and adjusting the multipurpose tray 28
Automatic printing 30
Manual feed printing 33
Two-sided printing 36
Choosing face-up delivery 37
Opening the face-up tray 37
Closing the face-up tray 40

Chapter 4 Maintenance 43

Safety first 44
Replacing the toner cartridge and using the Cleaning Page 45
Refilling the multipurpose tray 48
Cleaning the exterior 50

Chapter 5 Troubleshooting 51

Safety first 52
Chooser problems 53
The Chooser doesn't show the LaserWriter printer icon 53
The Macintosh doesn't recognize the LaserWriter 54
Some text changes to the Geneva font 54
The LaserWriter won't print a particular document 55
A particular page won't print 55
Paper is jammed 56
Paper feeds improperly 58
All the status lights are off 59
Image problems 59
Image is too light or too dark 60
Toner smears when rubbed 61
A page prints solid black 61
A page prints off center or images are out of place 61
Nothing prints on the paper 61
Unwanted lines or stripes appear 62
The printer only prints on part of the paper 62
Stains appear on the backs of printed pages 63
Image prints wavy or distorted 64
Documents are not being delivered to the face-up tray 64
Access door won't shut 64

Appendix A Ports and Status Lights 65

Ports 65
Status lights 66

Appendix B Specifications and Parts List 67

Specifications 67
Parts list 70

Appendix C Working With Your LaserWriter Fonts 71

The LaserWriter printer fonts 72
Serif fonts 72
Times 72
Courier 73
Sans serif fonts 74
Helvetica 74
Specialty fonts 75
Symbol 75
Sizes and styles 76
Using Key Caps to see screen fonts 77
Obtaining additional fonts 78
Commercial sources, shareware, and freeware 78
Adding/removing fonts 78

Appendix D Printing From the Optional Feeder and Cassette 79

Loading the paper cassette 80
Three-hole punched paper 83
Letterhead paper 84
Loading the envelope cassette 85

Appendix E How the LaserWriter Works 87

Appendix F Upgrading the Personal LaserWriter LS 89

Appendix G Service and Support 90

Appendix H Custom Installer Instructions 92

Using the Customize feature 93
What you can install 95
Software for different printers 95
TrueType fonts 95
Software for the Macintosh IIfx with System 6 96

Glossary 97

Index 101

Radio and television interference

The equipment described in this manual generates and uses radio-frequency energy. If it is not installed and used properly—that is, in strict accordance with Apple's instructions—it may cause interference with radio and television reception.

This equipment has been tested and complies with the limits for a Class B digital device in accordance with the specifications in Part 15 of FCC rules. These specifications are designed to provide reasonable protection against such interference in a residential installation. However, there is no guarantee that the interference will not occur in a particular installation.

You can determine whether your computer is causing interference by turning it off. If the interference stops, it was probably caused by the computer or one of the peripheral devices.

If your computer system does cause interference to radio or television reception, try to correct the interference by using one or more of the following measures:

- Turn the television or radio antenna until the interference stops.
- Move the computer to one side or the other of the television or radio.
- Move the computer farther away from the television or radio.
- Plug the computer into an outlet that is on a different circuit from the television or radio. (That is, make certain the computer and the television or radio are on circuits controlled by different circuit breakers or fuses.)
- Install a rooftop television antenna with a coaxial cable lead-in between the antenna and the television.

If necessary, consult your authorized Apple dealer or an experienced radio/television technician for additional suggestions. You may find helpful the following booklet, prepared by the Federal Communications Commission: *How to Identify and Resolve Radio-TV Interference Problems* (stock number 004-000-00345-4). This booklet is available from the U.S. Government Printing Office, Washington, DC 20402.

△ **Important:** Changes or modifications to this product not authorized by Apple Computer, Inc., could void the FCC certification and negate your authority to operate the product.

This product was tested for FCC compliance under conditions that included the use of shielded cables and connectors between system components. It is important that you use shielded cables and connectors to reduce the possibility of causing interference to radios, television sets, and other electronic devices. For Apple peripheral devices, you can obtain the proper shielded cables from your authorized Apple dealer. For non-Apple peripheral devices, contact the manufacturer or dealer for assistance. △

Welcome to the Personal LaserWriter LS Printer

This manual is your introduction to the Apple® Personal LaserWriter® LS printer. Use it now to set up and begin working with the Personal LaserWriter LS. Use it later as a reference for day-to-day routines and as a guide to maintenance and troubleshooting.

The Personal LaserWriter LS works with any Macintosh® computer that has 1 megabyte (MB) of RAM and a hard disk. If you're new to the Apple world, read the books that came with your computer before proceeding. You'll need to know basic operations and vocabulary to set up and print with the Personal LaserWriter LS.

How to use this manual

Read Chapter 1 through Chapter 3 to start working with your Personal LaserWriter LS. Read Chapters 4 and 5 to learn how to care for your printer.

- Chapter 1, "Setting Up the Personal LaserWriter LS," explains how to set up your Personal LaserWriter LS and connect it to your computer.
- Chapter 2, "Installing Printer Software," tells you how to install the printer resources and the fonts you'll use to print.
- Chapter 3, "Printing Documents," is a reference guide for day-to-day operation.
- Chapter 4, "Maintenance," covers routine maintenance procedures such as replacing the toner cartridge.
- Chapter 5, "Troubleshooting," covers solutions for minor problems that may occur.
- Appendix A, "Ports and Status Lights," describes the ports and status lights.
- Appendix B, "Specifications," contains a physical description of the printer.
- Appendix C, "Working With Your LaserWriter Fonts," covers the basics of Macintosh typography and the LaserWriter fonts.
- Appendix D, "Printing From the Optional Feeder and Cassette," explains how to load paper and print from a cassette. Read it if you had the optional feeder installed.
- Appendix E, "How the LaserWriter Works," covers the basics of laser printing.
- Appendix F, "Upgrading the LaserWriter," gives instructions for upgrading your Personal LaserWriter LS.

- Appendix G, "Service and Support," tells you what you have to do if you need repairs or assistance or want to extend your warranty coverage.
- Appendix H, "Custom Installer Instructions," explains how to use the LaserWriter LS Installer for unusual circumstances, especially if you have any other printers.
- The glossary gives definitions of terms used in this manual. When a term is introduced in the text, it often appears in **bold.**

About the Personal LaserWriter LS

The Personal LaserWriter LS is a member of a new generation of Apple laser printers. Designed for personal use, they provide the most economical way for you to enter the world of high-quality laser printing pioneered by Apple.

The Personal LaserWriter LS is a powerful tool. With it, you can print **documents** created with a wide variety of Macintosh applications, including many page layout and graphics programs. It is ideal for business correspondence and general office use. You can produce **camera-ready** masters for copying or instant printing, print your own transparencies for overhead projection, or prepare detailed layouts and proofs of work that will eventually be typeset.

Several TrueType™ **font families** are supplied with the Personal LaserWriter LS—including Times®, Helvetica®, Courier, and Symbol. TrueType allows you to display and print **fonts** smoothly in almost any point size.

You can also choose from a wide array of fonts available either commercially or as shareware or freeware. See Appendix C, "Working With Your LaserWriter Fonts," for details.

If you want programming or additional technical information about the Personal LaserWriter LS, write to APDA® (Apple Programmers and Developers Association):

Apple Computer, Inc.
APDA, Mailstop 33-G
20525 Mariani Avenue
Cupertino, CA 95014-6299

(800) 282-2732
Fax: (408) 562-3971
Telex: 171576
AppleLink® address: APDA

Important safety instructions

Read all the installation instructions in Chapter 1 carefully before you plug the LaserWriter into a wall socket.

For your own safety and the safety of your equipment, always take the following precautions:

- Follow all instructions and warnings dealing with your system.
- Keep the LaserWriter away from sources of liquids, such as wash basins, bathtubs, and shower stalls.
- Protect the LaserWriter from dampness or wet weather, such as rain and snow.
- Don't use devices that produce open flames, such as Bunsen burners or welding torches, near the LaserWriter.
- Don't use ammonia-based cleaners, which can react chemically with the toner, on or around the LaserWriter.
- Don't use alcohol-based cleaners, which can react chemically with the plastic case, on or around the LaserWriter.
- Keep these instructions handy for reference.

▲ **Warning:** Electrical equipment may be hazardous if misused. Operation of the LaserWriter or of similar products must always be supervised by an adult. Do not allow children access to the interior of any electrical product and do not permit them to handle any cables. ▲

Watch for these situations and if one occurs pull the plug!

If you encounter any of these circumstances, be sure to disconnect the power plug immediately! (Disconnect by pulling the plug, not the cord.)

- The power cord or plug is frayed or otherwise damaged.
- You spill anything into the case.
- The LaserWriter is exposed to rain or any other excess moisture.
- The LaserWriter has been dropped, or the case has been otherwise damaged.
- You suspect that the LaserWriter needs servicing or repair.
- You plan to clean the exterior of the case.

If you suspect your LaserWriter is damaged, contact your authorized Apple dealer.

Setting Up the Personal LaserWriter LS

This chapter tells you how to put together your Apple® Personal LaserWriter® LS printer. You'll find instructions for

- Choosing the best place to put the printer
- Unpacking and opening the printer
- Preparing the printer for use
- Connecting to a Macintosh® computer
- Plugging in and turning on the printer

Choosing a location for the LaserWriter

Before you begin setup, choose a work area that's convenient for you and that meets the physical requirements of the printer.

- Ordinary household current (with no symptoms of electrical problems, such as lights flickering when you run a big appliance—for instance, an air conditioner or a photocopier)
- Well-ventilated area away from direct sunlight
- Temperature between 64 and 77 degrees Fahrenheit (18 and 25 degrees Celsius)
- Humidity between 30 and 70 percent
- Space around the printer to allow good air circulation and easy access to various features:

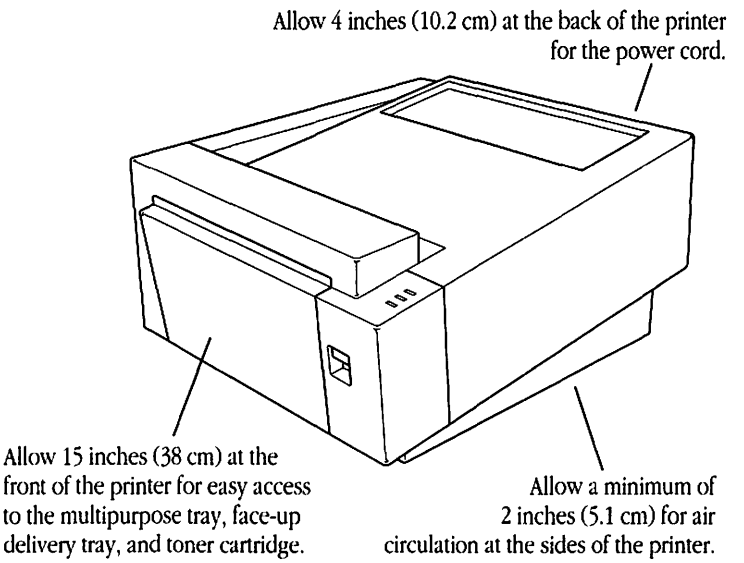

Choose a flat, stable surface for the printer. Be sure to leave adequate room to load and unload the **multipurpose tray**, to open the **face-up delivery tray**, and to replace the **toner cartridge**.

Do you have what you need?

If you haven't already done so, unpack your LaserWriter printer and toner cartridge. Be sure you have these items:

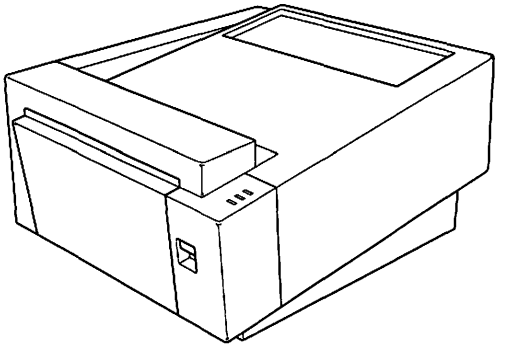

Personal LaserWriter LS printer

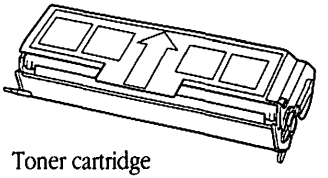

Toner cartridge
(Take the cartridge out of its box and remove the plastic wrapper.)

Apple System/Peripheral-8 Cable

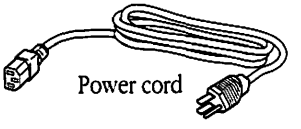

Power cord

Personal LaserWriter LS disks

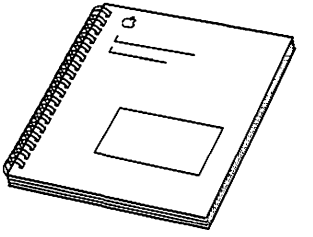

Personal LaserWriter LS Owner's Guide

Save the carton and packing material in case you need to ship the printer.

Opening the LaserWriter

Open the **access door,** at the front of the printer, so you can insert the toner cartridge.

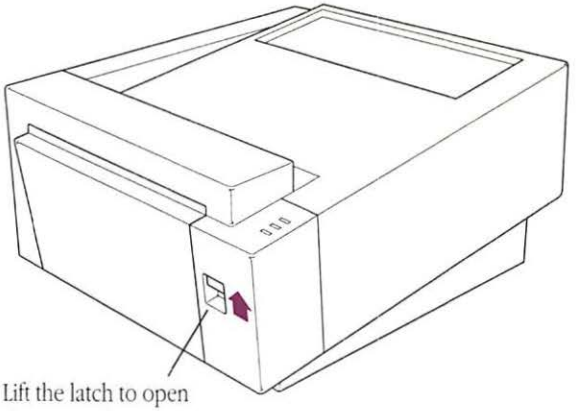

Lift the latch to open the access door.

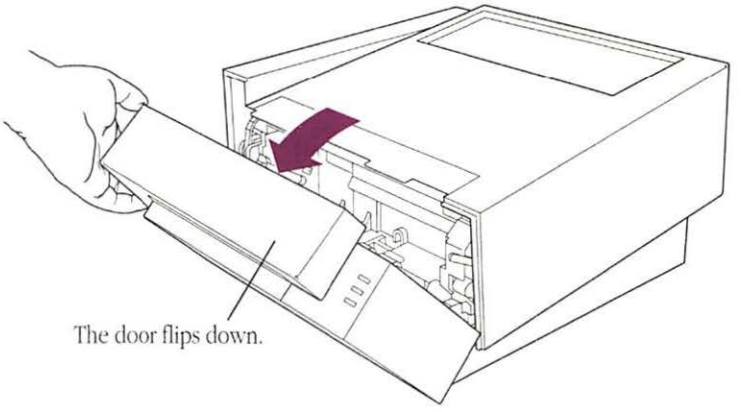

The door flips down.

Remove the orange plastic retainer(s) (installed for shipping). Squeeze and lift out each retainer.

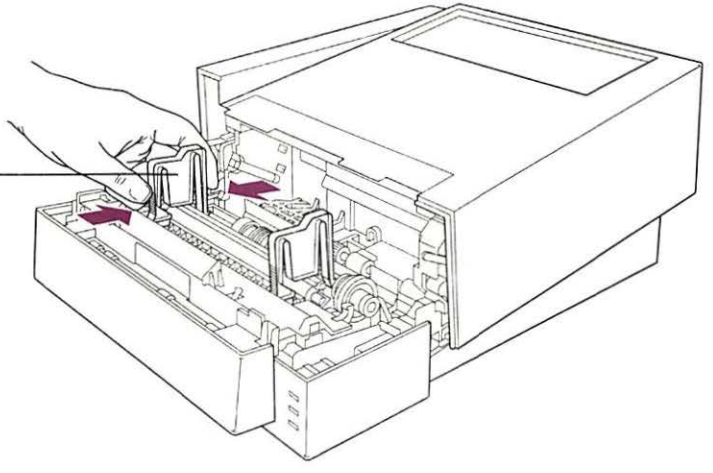

Installing the toner cartridge

The toner cartridge contains the powdered "ink" the printer uses. Each cartridge lasts for about 3500 pages, depending on the kind of printing you do. If you print a lot of graphic images, you may need to change cartridges more often.

1. **Unpack the toner cartridge and gently rock it to distribute the toner inside.**

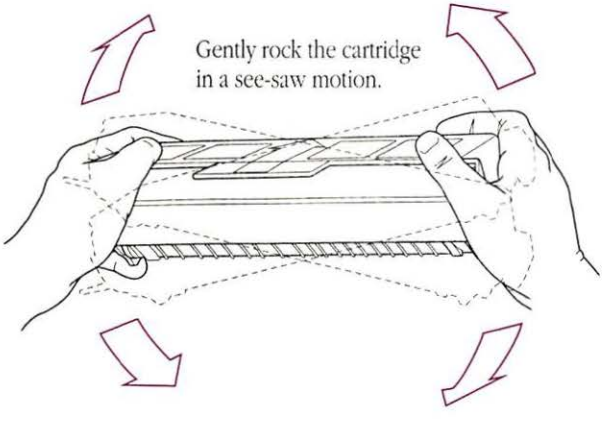

2. **Grab the tape tab and remove the tape.**

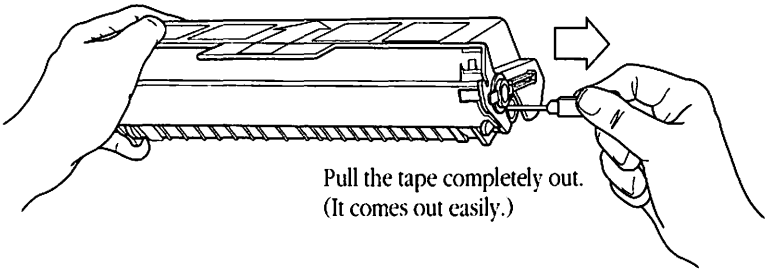

3. **Insert the cartridge into the LaserWriter printer.**

Line up the arrow on the cartridge with the arrow inside the LaserWriter.

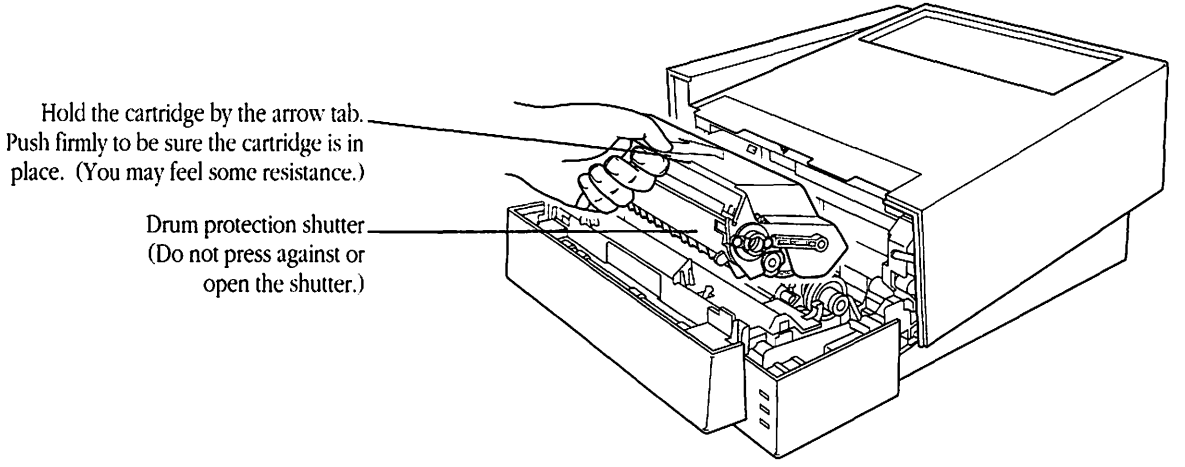

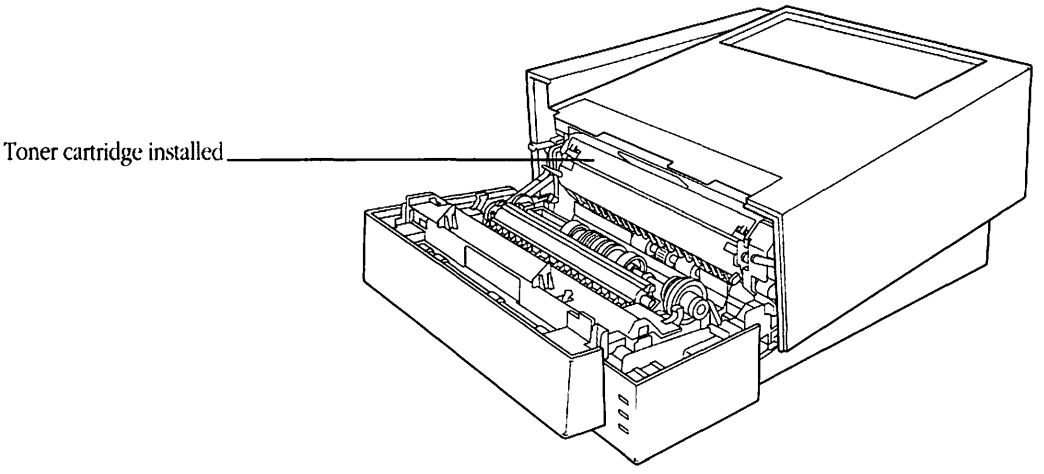

4. **Close the access door.**

   If the door will not shut, the gears may not have meshed properly to receive the toner cartridge. See "Access Door Won't Shut" in Chapter 5, "Troubleshooting."

When it's time to replace this toner cartridge with a new one, you must perform a simple cleaning procedure. You'll find instructions for replacing the cartridge and using the **Cleaning Page** in Chapter 4, "Maintenance."

Loading paper into the multipurpose tray

The multipurpose tray holds up to 70 sheets of paper and feeds the paper automatically.

❖ *By the way:* You can also use the multipurpose tray for manually feeding single sheets of paper, transparencies, or labels. To learn about printing other kinds of paper, see Chapter 3, "Printing Documents." ❖

1. **Open the multipurpose tray.**

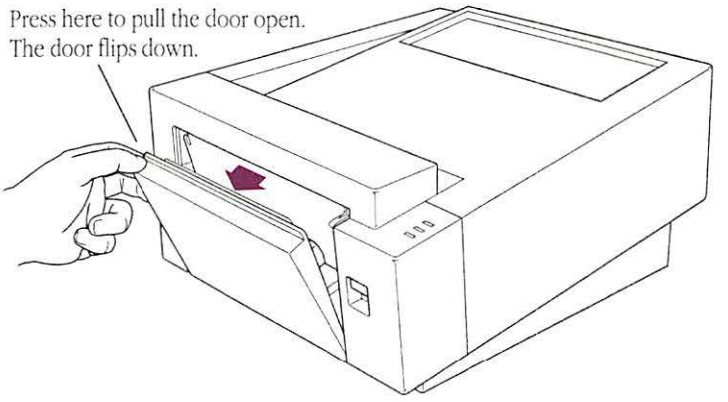

2. **Adjust the multipurpose tray extension to suit your needs. (Your paper should rest on the tray without sticking out over the edge.)**

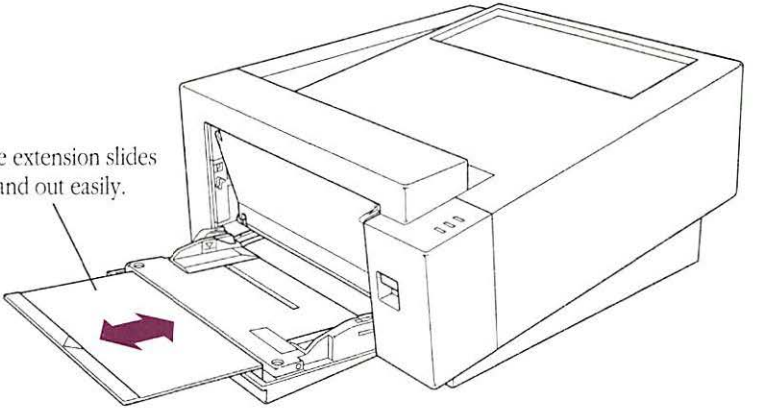

3. Load paper into the multipurpose tray.

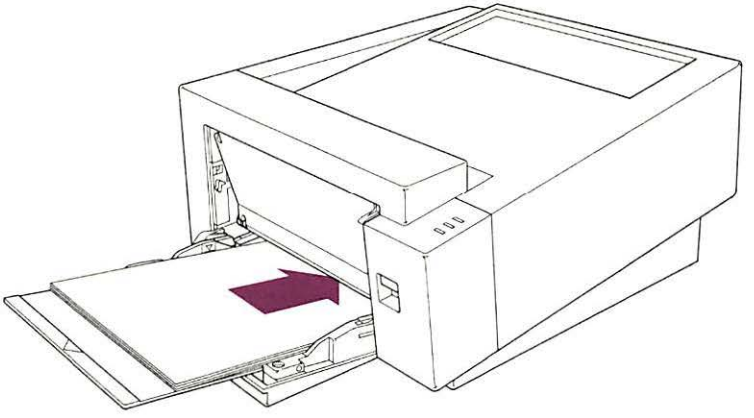

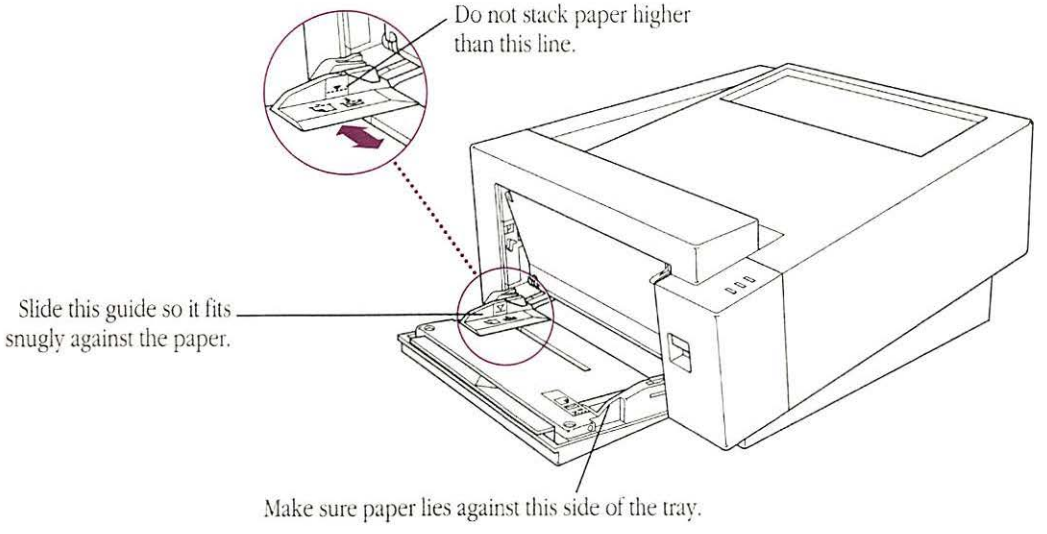

Connecting the printer to your Macintosh

To complete this procedure you need the peripheral-8 cable that came with your LaserWriter. Both ends of the cable are identical, so you don't need to worry about which end plugs in where.

▲ **Warning:** Before you begin connecting the printer to your Macintosh, make sure the computer is turned off. ▲

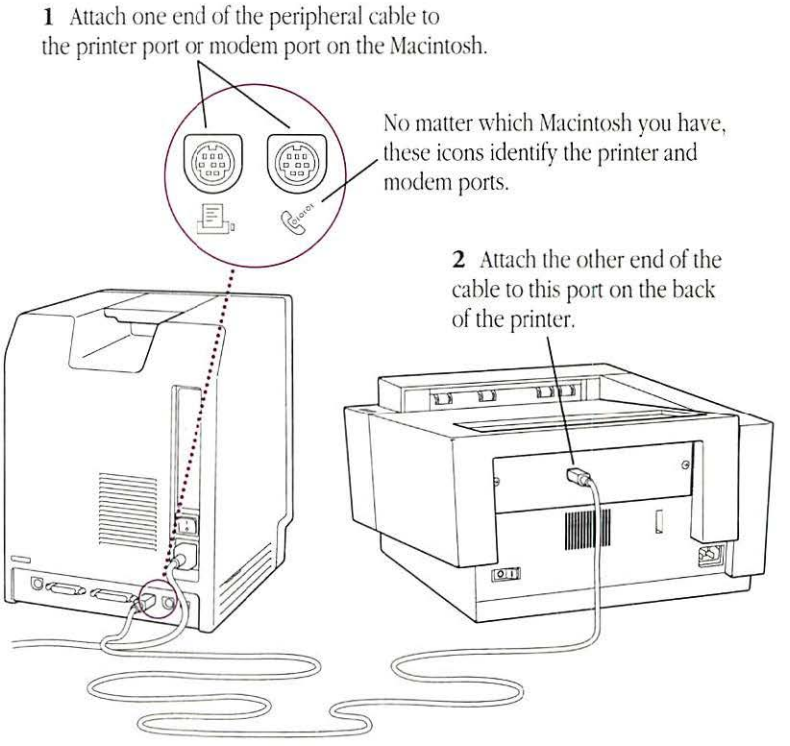

△ **Important:** It's OK to connect the LaserWriter to either the printer or modem **port.** If you use the printer port, you need to make sure AppleTalk® is inactive. You'll find the information you need when you get to "Choosing a Printer" in Chapter 3. △

Plugging in and turning on the LaserWriter

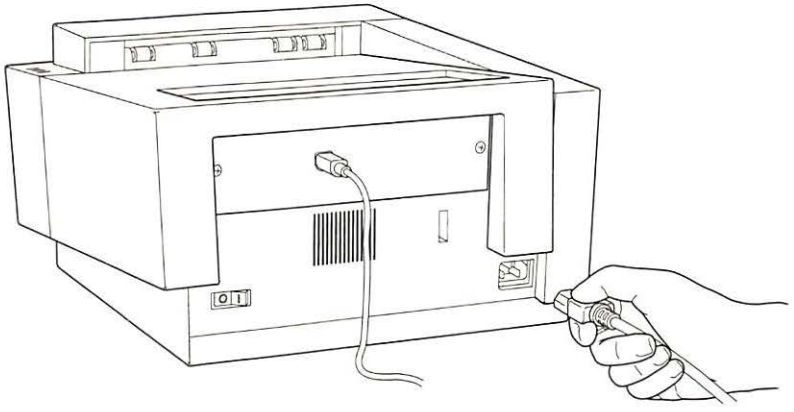

Insert the power cord into the receptacle on the back of the LaserWriter. Then plug the cord into a grounded outlet.

▲ **Warning:** The LaserWriter is equipped with a three-wire grounding plug—a plug that has a third (grounding) pin. This plug fits only a grounding-type AC outlet. If you are unable to insert the plug into an outlet, contact a licensed electrician to replace the outlet with a properly grounded one. This equipment is meant to be electrically grounded. Do not defeat the purpose of the grounding plug! ▲

To turn on the printer press the on/off switch.

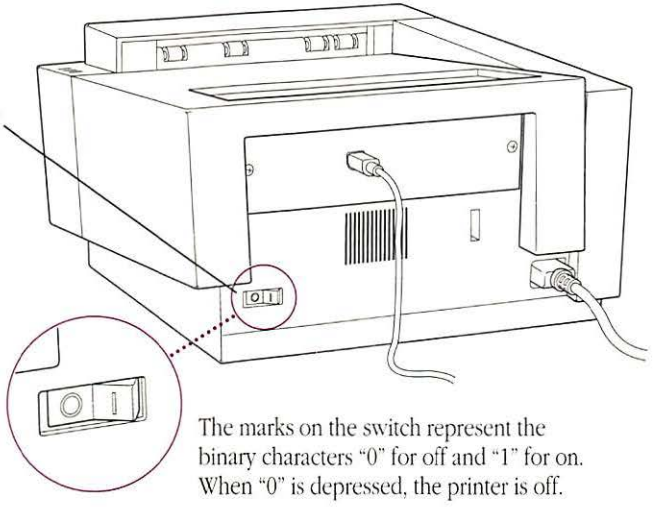

The marks on the switch represent the binary characters "0" for off and "1" for on. When "0" is depressed, the printer is off.

As soon as you turn on your LaserWriter, the green Ready/In Use light begins to glow steadily. All other lights should be off.

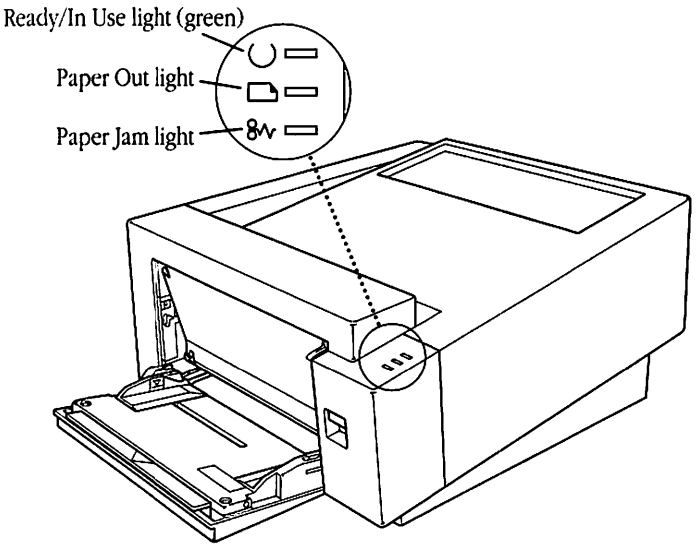

Congratulations! You've set up your Personal LaserWriter LS printer and connected it to your Macintosh. Next, follow the instructions in Chapter 2, "Installing Printer Software."

Installing Printer Software

To install printer software, you need to use the disks that came with your Personal LaserWriter LS. They're in the accessory kit that came with the printer.

- *System requirements:* To use the Personal LaserWriter LS, your Macintosh must have at least 1 MB of RAM and a hard disk.

Before beginning

Before you **install** the software, you need to make two preparations: protecting the original disks and making sure you have the correct version of **system** software. These preparations are explained in the next two sections.

Protecting your disks

You can protect the disks that came with your LaserWriter by locking the disks (so you don't accidentally change anything on them) and by making backup copies of them (so if one set is damaged, you still have a copy).

1. **Make sure the disks are locked.**

   You can lock a disk by sliding up its write-protection tab. The disk is locked when you can see through the hole. For more details, see the books that came with your Macintosh.

2. **Make a backup copy of each disk.**

   You can find instructions for copying disks in the books that came with your Macintosh. You'll need a blank 800K disk for each backup.

Checking the version of your system software

Before you install the **printer software** and fonts that came with your Personal LaserWriter LS, you need to know which version of Macintosh system software you have in your System Folder.

▲ **Warning:** You must have system software version 6.0.7 or later in order to use the Personal LaserWriter LS with your Macintosh. If you try to use an earlier version of system software with the Personal LaserWriter LS printer software, it won't work, and the Installer described in this chapter won't complete the installation. ▲

To identify the version of system software you have, follow these steps:

1. **Go to the Finder™ program.**

   If your computer is off, turn it on. If it is on, quit any programs you might be running.

2. **Choose the first command from the Apple menu.**

   Depending on your system software, this command is either "About the Finder" or "About This Macintosh."

3. **Check the information in the About box.**

   The About box may look like one of those shown below, depending on the version of system software you have.

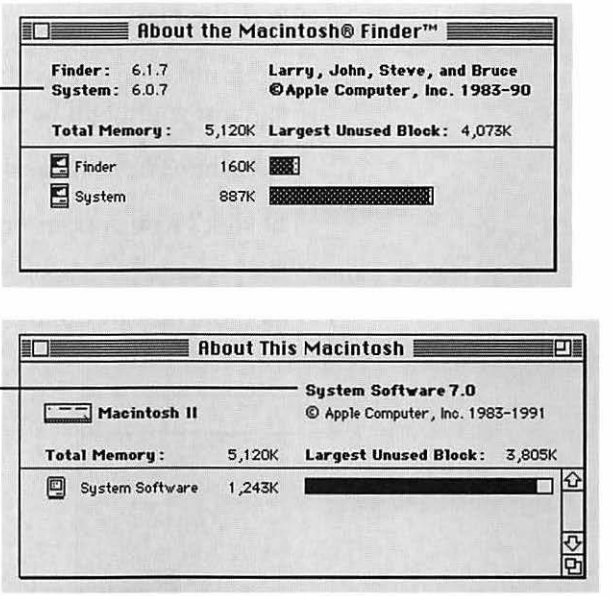

This number identifies the version of system software you're using. You must have system software version 6.0.7 or later.

4. **Close the About box.**

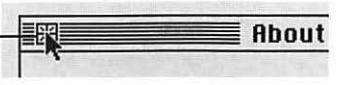

Click here to close the About box.

What to do if you need to upgrade system software

If you have an earlier version of system software, you must install new system software before you go on. You will be able to get new system software from your authorized Apple dealer.

If you like, you can purchase an upgrade kit from your authorized Apple dealer, including all the disks and manuals you need. Alternatively, you can take blank disks to your local user group and get the software for a small fee.

Installing the printer files

Your LaserWriter requires special software to run. The Personal LaserWriter LS comes with a special program, called the Installer, that will install the software for you. Follow the steps in this section to install the software.

1. **Go to the Finder.**

   If your machine is off, turn it on. If it's already on, quit any programs you might be running.

2. **Insert the *Personal LaserWriter LS Installation* disk.**

   The disk's **icon** appears on the **desktop,** as shown in the next step.

3. **Open the disk by double-clicking its icon.**

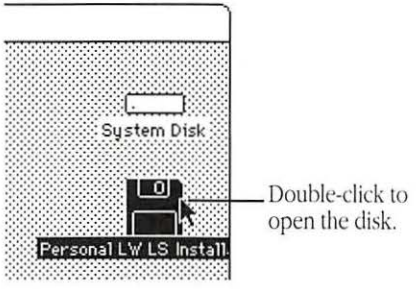

4. **Open the Installer by double-clicking its icon.**

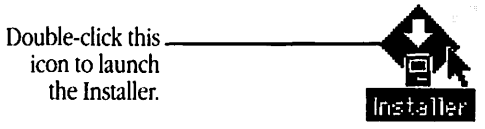

After you open the Installer, it displays some information. Click OK to continue.

5. **In the Easy Install box, click the Install button.**

   The Installer takes a few moments to calculate what needs to be done and then begins to copy files. The whole process may take three minutes.

6. **When the *Personal LaserWriter LS Installation* disk is ejected, follow the instructions you see on the screen.**

   You'll have to swap disks a few times. Each time, the Installer will eject one disk and ask you to insert another. Keep following the instructions on the screen.

7. **When you see a message reporting that the installation was successful, follow the instructions on the screen.**

8. **If you have other printers, update their software according to the instructions in Appendix H, "Custom Installer Instructions."**

   If the Personal LaserWriter LS is your only printer, you can proceed without turning to Appendix H.

❖ *Macintosh IIfx owners:* If you're using System 6 and you have connected your Personal LaserWriter LS to a Macintosh IIfx, you must configure the IIfx Serial Switch CDEV. Choose Control Panel from the Apple menu, select the IIfx Serial Switch icon, then click the Compatible button. Finally, close the Control Panel and restart your Macintosh. ❖

An important step: Choosing the printer

Your printer is now set up. However, you cannot print on it until you've informed the Macintosh that the Personal LaserWriter LS is the printer you wish to use. You do this by selecting it in the **Chooser.** See "Choosing a Printer" at the beginning of the next chapter.

Additional preparations

You've already installed all the software necessary to print, and if you want to start printing right away, you can skip ahead to Chapter 3. However, there are several other preparations you may first wish to make, as explained in the three sections that follow:

- **Install the Cleaning Page,** a file that you can print to clean your Personal LaserWriter LS.
- **Delete old versions of the Font/DA Mover,** a program that allows you to install and delete fonts in System 6. If you use Font/DA Mover, you must use version 4.0 or later.
- **If necessary, perform custom installations.** If you have other printers besides the Personal LaserWriter LS, or if you are using one model of Macintosh to create **startup disks** for another model, you may need to install special files.

The Cleaning Page

The Cleaning Page is a special file which, when printed in the manner described below, can clean your LaserWriter engine. You print the file using the TeachText program. Both the Cleaning Page and the TeachText program are on the *Personal LaserWriter LS Installation* disk. You can use the Cleaning Page without copying it from its original disk if you wish, or for convenience, you can copy it to your startup disk.

To copy the files, follow these directions:

1. **Insert the *Personal LaserWriter LS Installation* disk.**
2. **Open the disk by double-clicking its icon.**

3. **Copy the files by dragging their icons to your startup disk.**

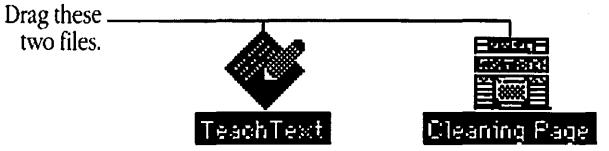

If you already have the TeachText program on your startup disk, you don't have to copy it again.

4. **If you wish, you can put TeachText and the Cleaning Page into a folder.**

The Font/DA Mover

The Font/DA Mover is the program that allows you to install and delete fonts in System 6. The Installer automatically copies the Font/DA Mover into the System Folder on your startup disk. You should drag any versions of the Font/DA Mover earlier than 4.0 to the Trash. (You can determine the version number of the Font/DA Mover by selecting its icon and choosing Get Info from the File menu.)

If you like, you can move the new version from the System Folder to another folder.

△ **Important:** If you're using System 7, you don't need the Font/DA Mover. To install fonts, you simply drag them to the icon of your System Folder (*not* to its window). For more details, see the manuals that came with your computer (or with your latest system software update). △

Custom installations

The Installer program has a "Customize" function that allows you to install special software to support printers besides the Personal LaserWriter LS.

In the rare event that you need to install printer software onto a startup disk for a Macintosh IIfx using a different model of Macintosh (for example, using a Macintosh SE to create a startup disk for a Macintosh IIfx), the Customize function of the Installer allows you to do that as well.

See Appendix H, "Custom Installer Instructions," for details on custom installations.

TrueType fonts

Your Personal LaserWriter LS comes with several TrueType™ fonts, including Times, Helvetica, Courier, and Symbol (which is useful for writing equations and formulas). TrueType fonts can also be called *variable-size, outline,* or *scalable* fonts.

TrueType fonts are an improvement on the old, fixed-size fonts that you may now have in your system. With fixed-size fonts, you need a different font for each size you use—one font, say, for 12-**point** Times, another for 14-point Times, and so on. But with a single TrueType font you can create any size you want, even odd sizes like 31-point, and the font will look smooth, both on the screen and on paper.

How TrueType and fixed-sized fonts work together

Although TrueType fonts offer distinct advantages, your Personal LaserWriter LS can also use fixed-size fonts, sometimes called **bitmapped** fonts. In fact, you will often have fixed-size and TrueType versions of the same font.

Keeping both versions of a font takes up more **disk space**, but it has two advantages. First, it allows the Macintosh to display and print the font correctly, even when memory is low. Second, it prevents old documents that use the fixed-size font from repaginating.

Determining which fonts are which

In System 6, you can use the Font/DA Mover to determine which fonts are TrueType and which are fixed-size. The following figure shows an example of TrueType fonts and fixed-size fonts listed in the Font/DA Mover.

△ **Important:** You must have version 4.0 or later of the Font/DA Mover to see TrueType fonts listed. To install the latest version of Font/DA Mover, follow the instructions in the section "Installing the Printer Files," earlier in this chapter. △

TrueType fonts have no number after their names. These fonts are TrueType Times in plain, bold, italic, and bold-italic.

Fixed-size fonts have numbers after their names.

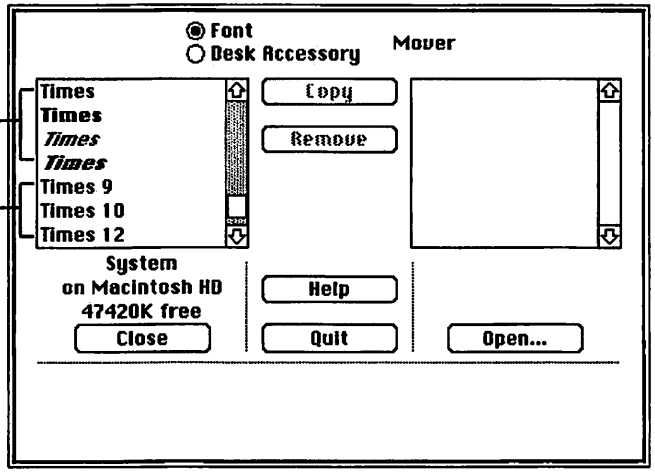

If you have System 7, you can distinguish TrueType and fixed-size fonts by their icons, as shown in the following figure.

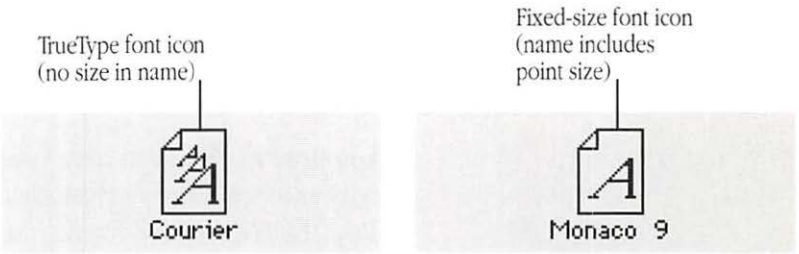

To copy or remove fonts, see the books that came with your Macintosh (or with your latest system software update).

To install the TrueType fonts that came with your Personal LaserWriter LS, see the section, "Installing the Printer Files," earlier in this chapter. For examples of the fonts, see Appendix C, "Working With Your LaserWriter Fonts."

What next?

Congratulations! You have successfully installed the Personal LaserWriter LS printer software. Next, you need to identify your new printer in the Chooser. See "Choosing a Printer" at the beginning of Chapter 3.

Printing Documents

Printing a document can be as simple as choosing the Print command, or you can take advantage of special options and features. This chapter tells you about

- Choosing a printer
- Defining your page setup
- Printing from within a program or from the desktop
- Printing on different kinds of paper

Choosing a printer

Before you use your LaserWriter for the first time, you must let the Chooser know which printer you want to use.

1. **Choose the Chooser from the Apple menu.**

   The Chooser window opens.

2. **Set the Chooser options as shown here:**

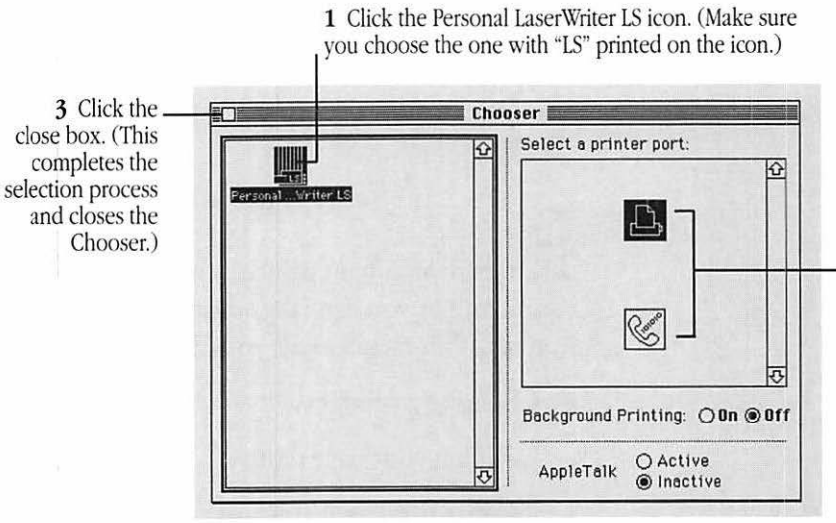

If you are using the MultiFinder® program or System 7, you can turn on Background Printing by clicking the On button in the Chooser. Background Printing allows you to continue your work while you print.

△ **Important:** You don't need to use the Chooser every time you print. If the Personal LaserWriter LS is the only printer you're using, this should be the last time you need to use the Chooser to choose the printer. △

Printing Documents

Printing a document can be as simple as choosing the Print command, or you can take advantage of special options and features. This chapter tells you about

- Choosing a printer
- Defining your page setup
- Printing from within a program or from the desktop
- Printing on different kinds of paper

Choosing a printer

Before you use your LaserWriter for the first time, you must let the Chooser know which printer you want to use.

1. **Choose the Chooser from the Apple menu.**

   The Chooser window opens.

2. **Set the Chooser options as shown here:**

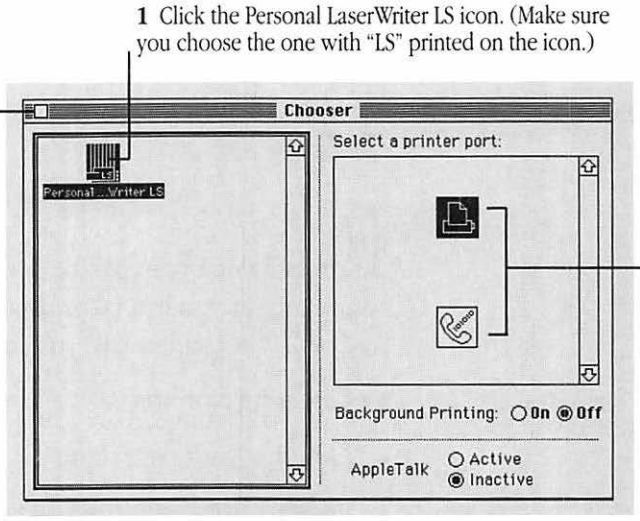

If you are using the MultiFinder® program or System 7, you can turn on Background Printing by clicking the On button in the Chooser. Background Printing allows you to continue your work while you print.

△ **Important:** You don't need to use the Chooser every time you print. If the Personal LaserWriter LS is the only printer you're using, this should be the last time you need to use the Chooser to choose the printer. △

Defining your page setup

Because the most frequently used options are preset, you do not have to use Page Setup every time you print. The Page Setup command lets you change printing specifications, such as paper size.

If you are using an application program, the **dialog box** may not look exactly like the one shown here, but all Page Setup dialog boxes have many features in common.

1. **Choose Page Setup from the File menu.**

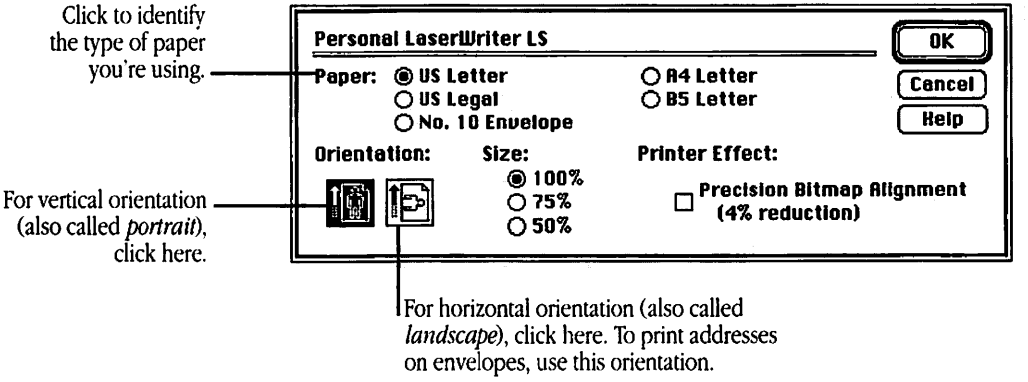

The Precision Bitmap Alignment printer effect reduces everything on the printed page by 4 percent, letting you avoid minor distortions. To see what difference this setting makes, print a document with it and without it.

2. **When you've made your choices, click OK.**

Printing from within a program

To print a document from within an application program, the program must be open and the document window must be active.

❖ *Note:* Before attempting the printing procedure in this section, make sure your paper is ready, as described in "Using the Multipurpose Tray," later in this chapter. ❖

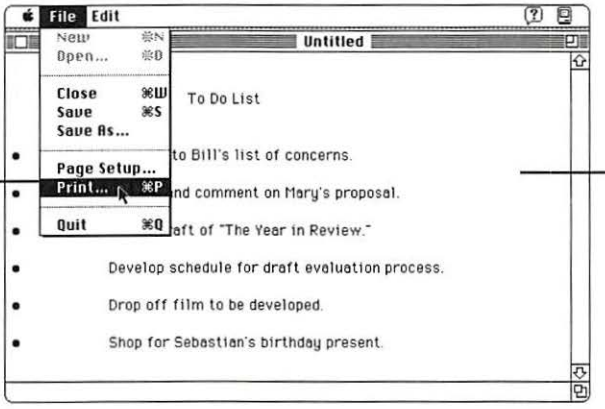

Choose Print from the File menu.

The document to be printed appears in the active window.

In most cases a Print dialog box appears, with options for printing your document. The dialog box may not look exactly like the one shown here, but it will have options in common with this one.

When the options are set the way you want them, click Print.

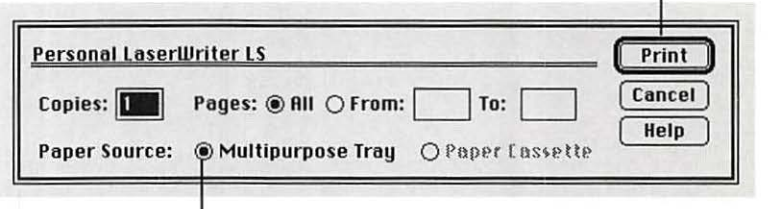

To use the multipurpose tray, click here. (This lets you do automatic or manual feed printing.)

Printing from the Finder desktop

Printing from the desktop is ideal when you know which document you want to print—and you want to print it as is, with no changes. (If you see a message that the program used to create the document is already open, print from within the program.)

❖ *Note:* Before attempting the printing procedure in this section, make sure your paper is ready, as described in "Using the Multipurpose Tray," later in this chapter. ❖

To print from the desktop:

1. **Select the icon of the document you want to print.**
2. **Choose Print from the File menu.**

   The program you used to create the document opens temporarily. Then the Print dialog box appears, with options for printing your document.

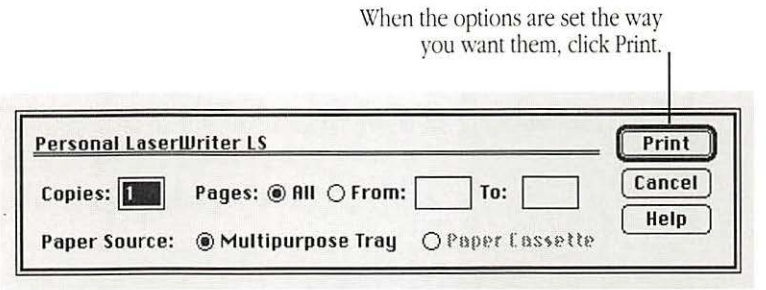

Using the multipurpose tray

As its name suggests, the multipurpose tray has more than one purpose:

- Automatic printing
- Manual feed printing
- Two-sided printing

Opening and adjusting the multipurpose tray

You always open the multipurpose tray in the same way. How you adjust the tray depends on the kind of paper or envelope you plan to print on.

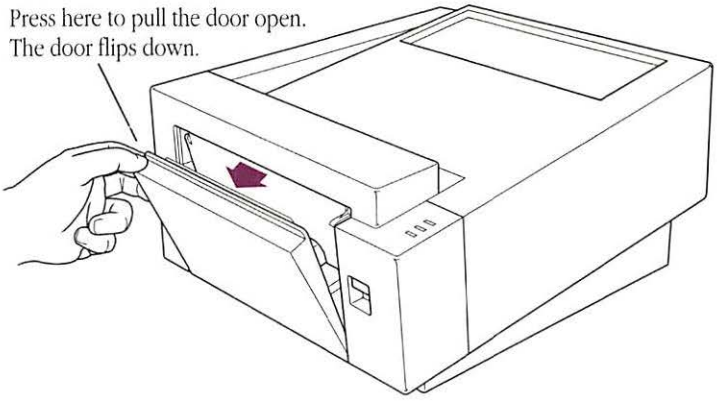

Adjust the multipurpose tray to suit your needs. (Your paper should rest on the tray without sticking out over the edge.)

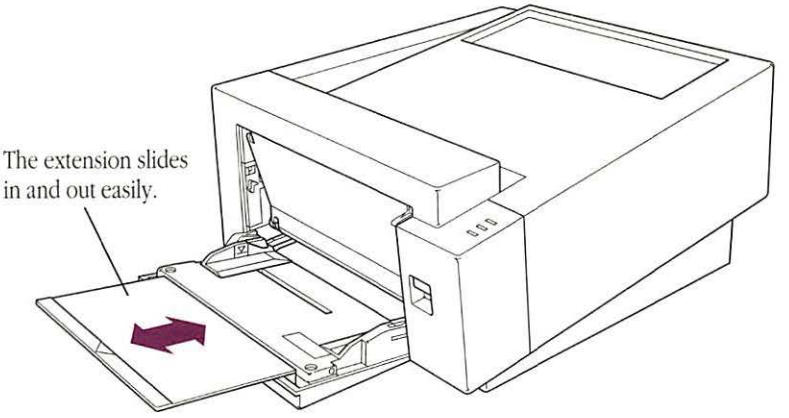

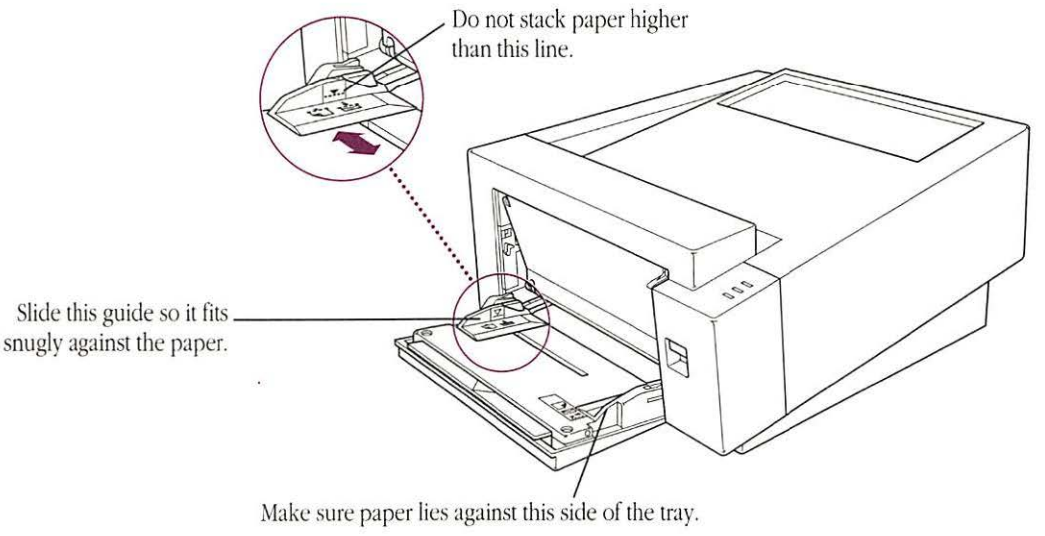

Automatic printing

The multipurpose tray is useful for all your printing jobs. For most of your day-to-day printing, you'll probably keep a small stack of paper on the multipurpose tray and let the LaserWriter feed the paper automatically.

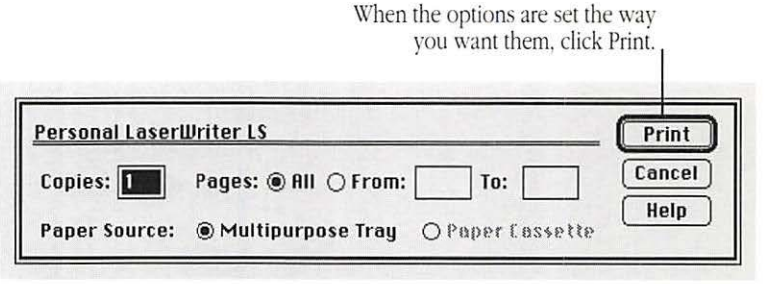

❖ *By the way:* If you have the optional paper cassette (which can hold more paper), you can use the multipurpose tray for small automatic printing jobs and the cassette for larger ones. And you can keep different kinds of paper in each. For more information, see Appendix D, "Printing From the Optional Feeder and Cassette." ❖

The next four illustrations will help you orient paper and envelopes correctly in the multipurpose tray.

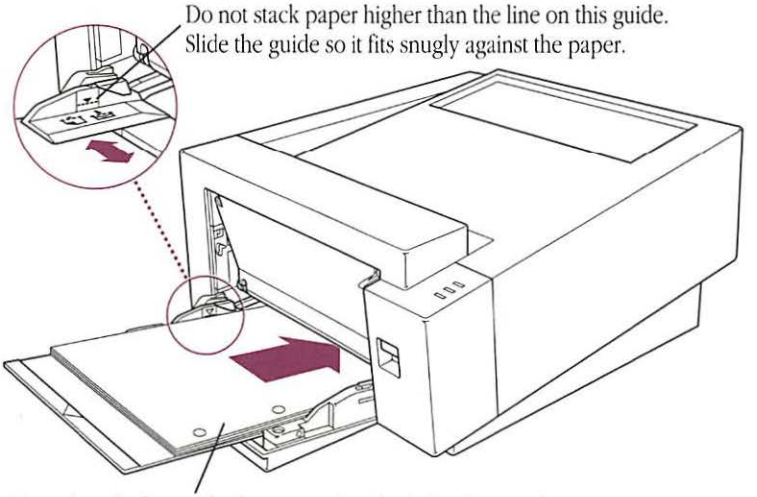

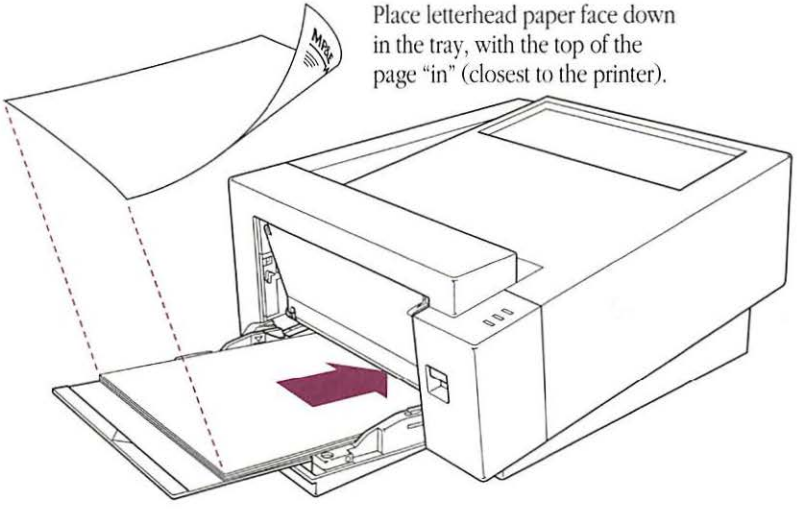

△ **Important:** When you print envelopes, you need to use the face-up delivery tray to receive the printed results. For instructions on opening the tray, see "Choosing Face-Up Delivery," later in this chapter. △

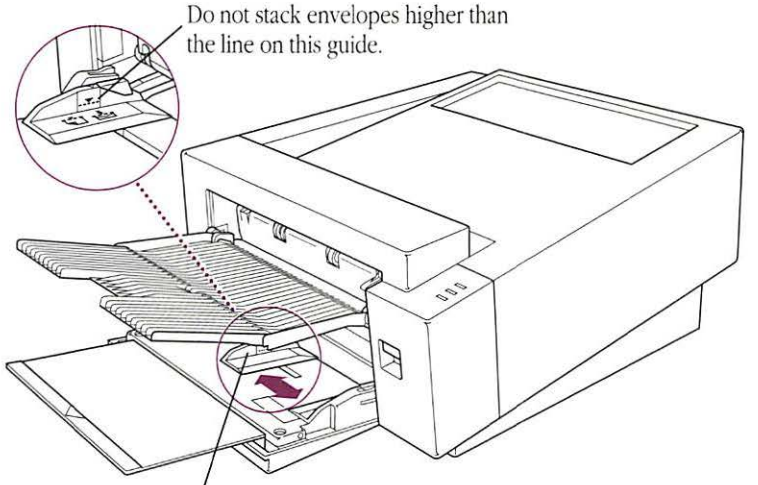

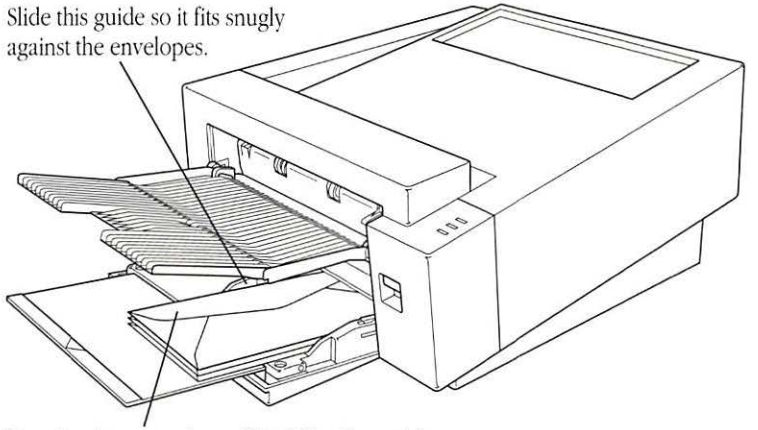

Manual feed printing

When you want to print on special materials, including sheets of labels or transparencies, use the multipurpose tray and feed them by hand, one at a time.

△ **Important:** Any time you want to print from the multipurpose tray, you must select Multipurpose Tray in the Print dialog box. △

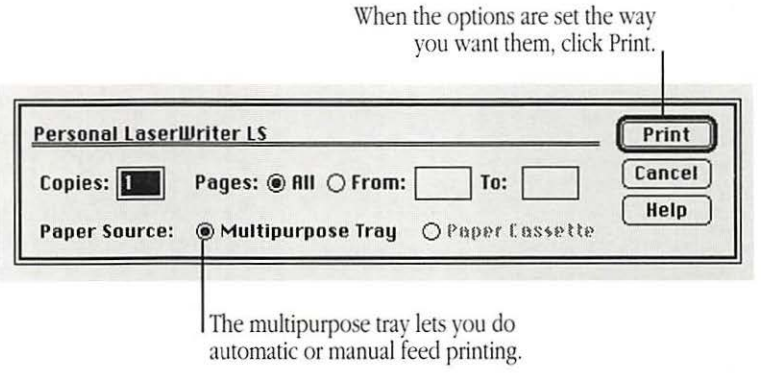

The next five illustrations will help you orient paper and envelopes correctly in the multipurpose tray.

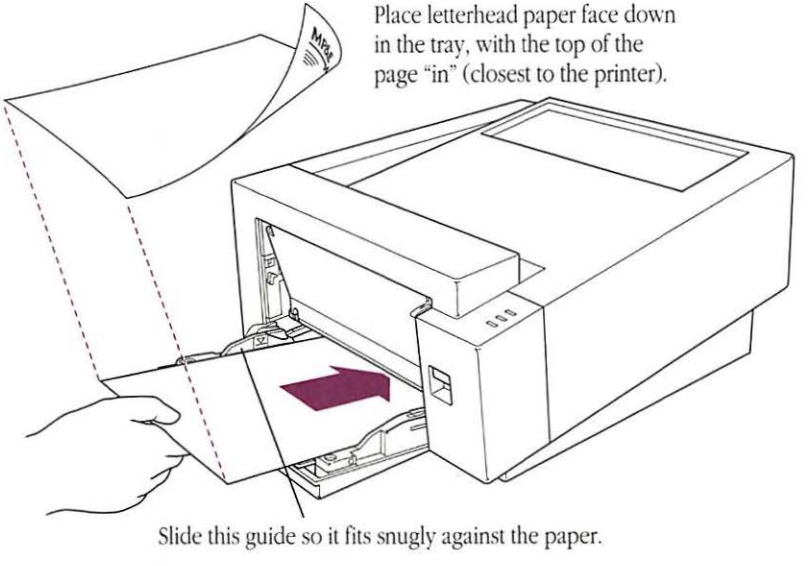

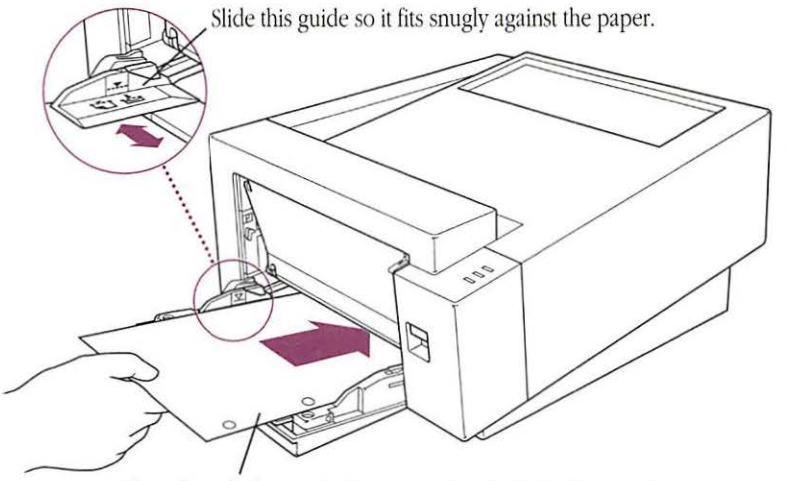

△ **Important:** When you print envelopes, labels, or overhead transparencies, use the face-up delivery tray. (This helps avoid paper jams and curling.) For details on opening and using the tray, see "Choosing Face-Up Delivery," later in this chapter. △

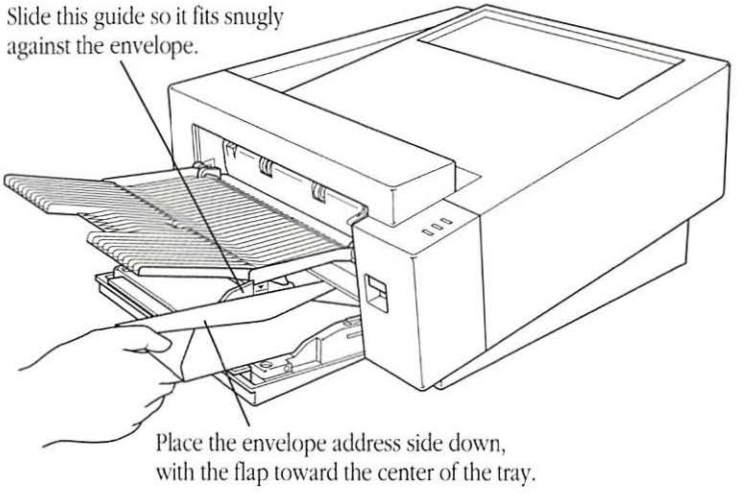

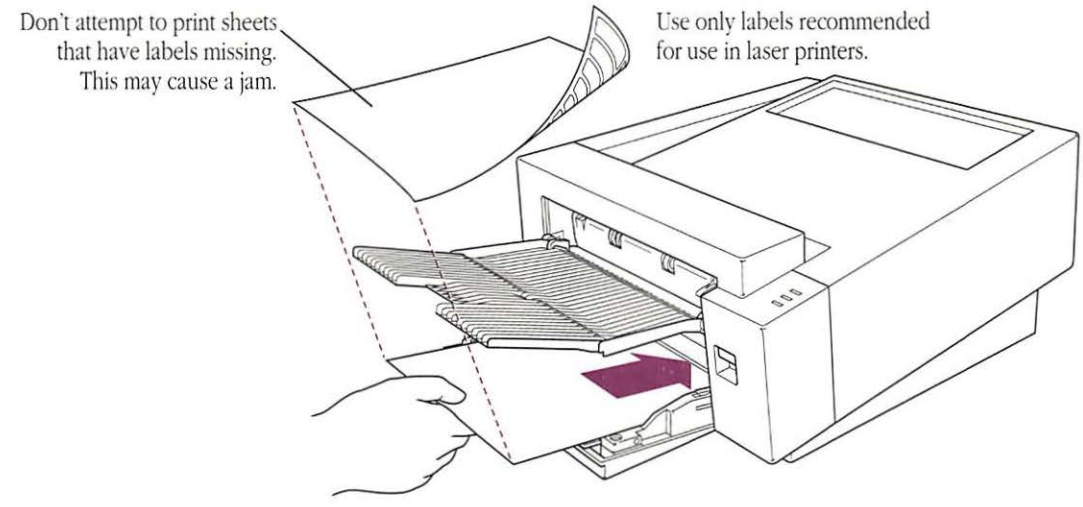
Don't attempt to print sheets that have labels missing. This may cause a jam.
Use only labels recommended for use in laser printers.

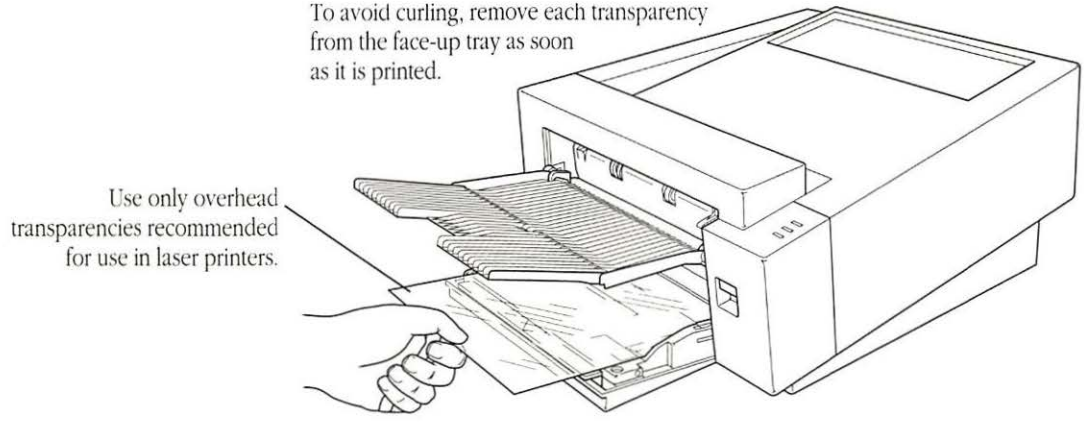
To avoid curling, remove each transparency from the face-up tray as soon as it is printed.
Use only overhead transparencies recommended for use in laser printers.

Two-sided printing

To print two-sided documents, use the multipurpose tray.

1. **Print the first side of the page.**
2. **Place the printed page in the multipurpose tray, printed side up, with the top of the page toward the printer.**

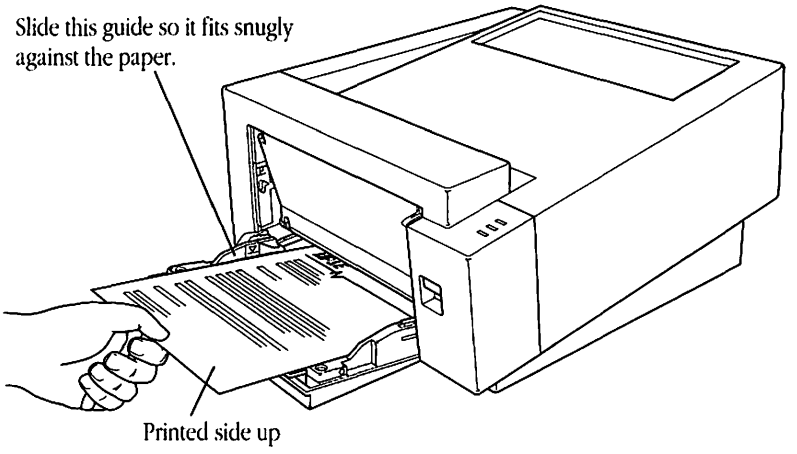

3. **Print the second side of the page.**

Choosing face-up delivery

Most of the time, face-down delivery (the standard delivery method) will serve your needs. If necessary, however, you can choose to have printed pages delivered face up.

△ **Important:** When you print envelopes, labels, or overhead transparencies, use the face-up delivery tray. (This helps avoid paper jams and curling.) △

Opening the face-up tray

1. **Open the multipurpose tray; then lift the green latch to release the face-up tray.**

   Hold your other hand under the face-up tray to support it.

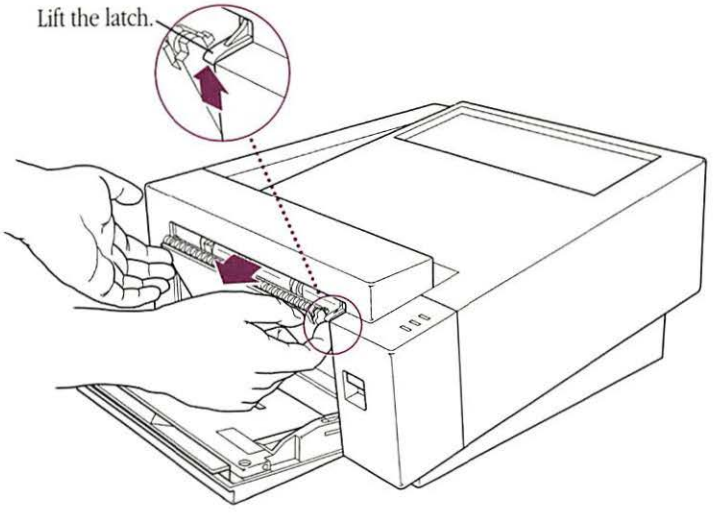

2. Lift the face-up tray up and out.

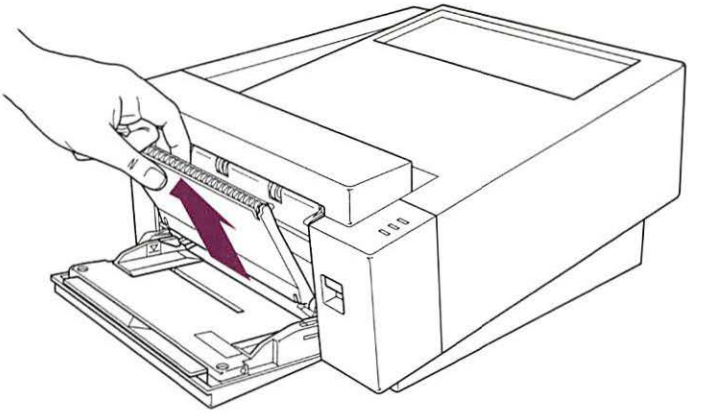

3. Raise the tray until it locks into place.

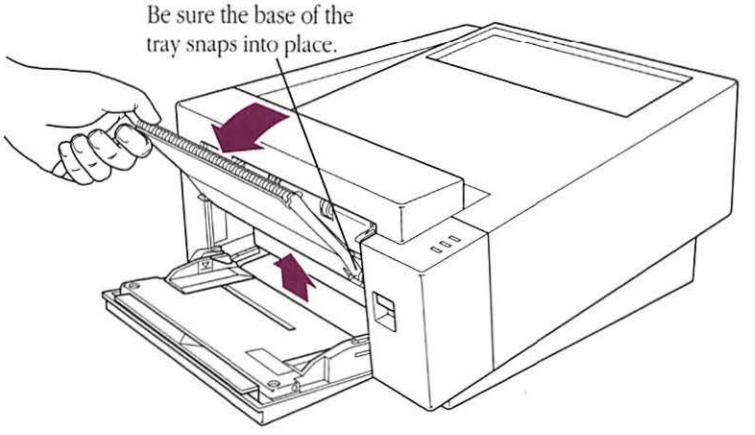

4. Flip open the extension.

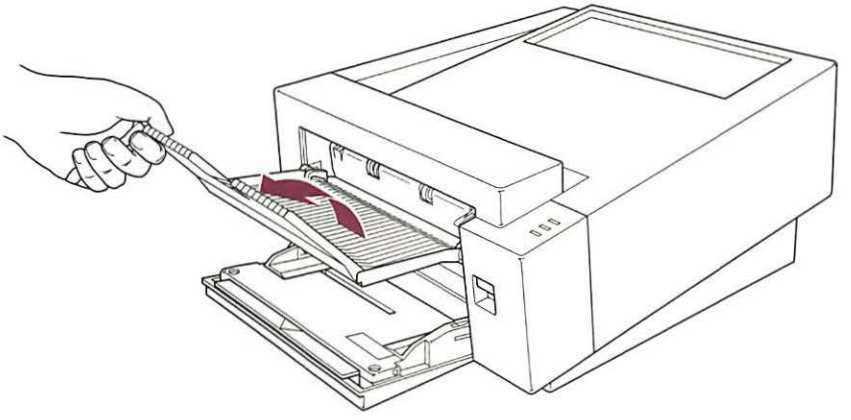

Closing the face-up tray

1. **Fold in the extension.**

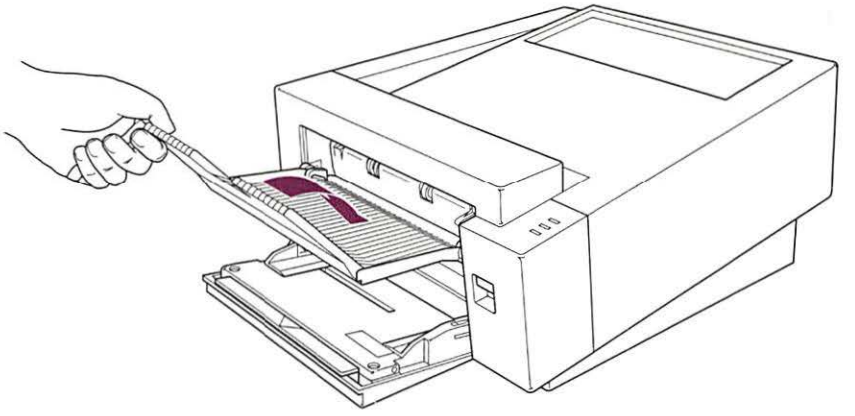

2. **Lift the tray at an angle and push down firmly to unlock it.**

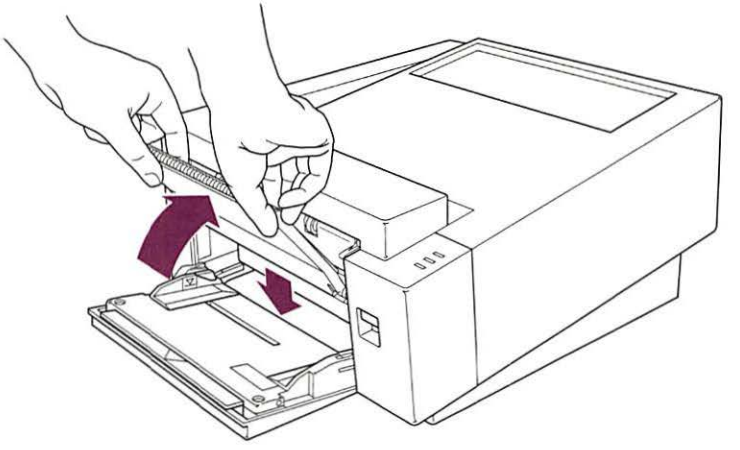

3. Lower the folded face-up tray into position for closing.

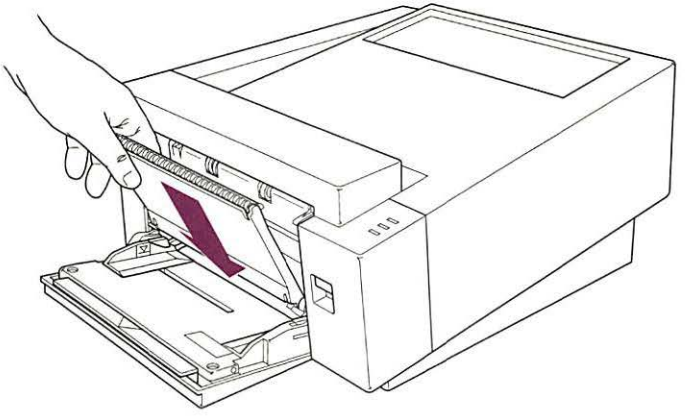

4. Close the tray firmly.

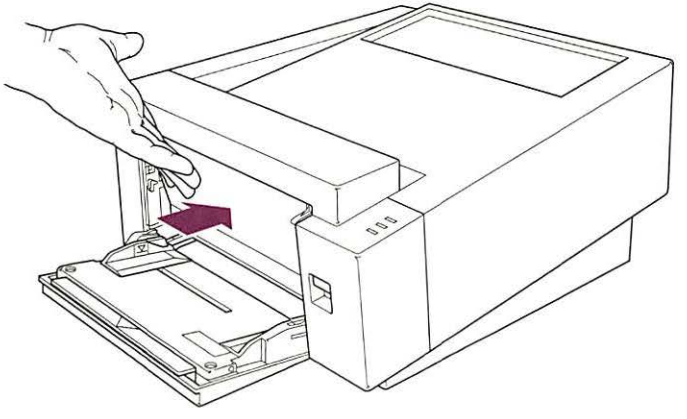

Maintenance

The Personal LaserWriter LS is designed for trouble-free operation. Maintenance involves replacing the toner cartridge when it runs out, using the Cleaning Page, and refilling the multipurpose tray.

For other service, see your authorized Apple dealer.

Safety first

Follow these safety tips to avoid damage to the LaserWriter printer and harm to you and other users.

- Don't open the drum protection shutter on the toner cartridge. (The drum is sensitive to light.)

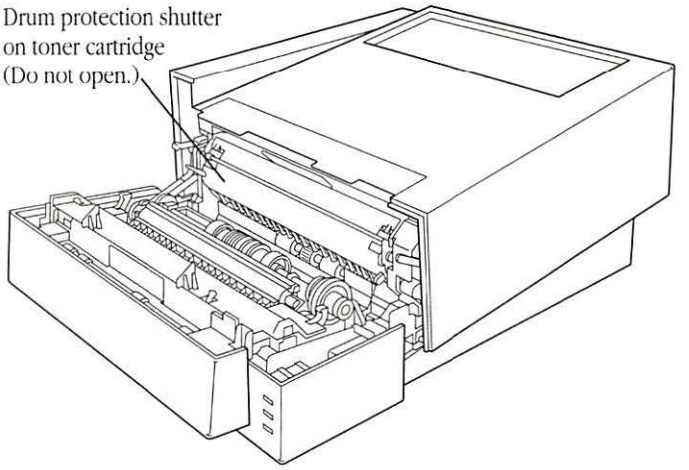

- Don't leave the access door open. (Exposing the toner cartridge to light may damage the cartridge.)
- Don't use oil inside the LaserWriter printer.
- Don't attempt to disassemble the printer.
- Don't place anything on top of the printer (where it would block delivery of printed pages).
- Don't use ammonia-based cleaners on or around the printer (they may react with the toner).
- Don't use alcohol-based cleaners on or around the printer (they may react with the plastic case).

Replacing the toner cartridge and using the Cleaning Page

Each toner cartridge should yield about 3500 pages. If you print a lot of graphic images, you may need to change cartridges more often. If pages start to look too light, or you see thin white lines in dark images, it's time to change the cartridge. Be sure to use cartridges designed for the Personal LaserWriter LS printer.

1. **Remove and discard the used cartridge.**

   To avoid spilling leftover toner powder, keep the cartridge horizontal.

2. **Unpack the new toner cartridge and gently rock it to distribute the toner inside.**

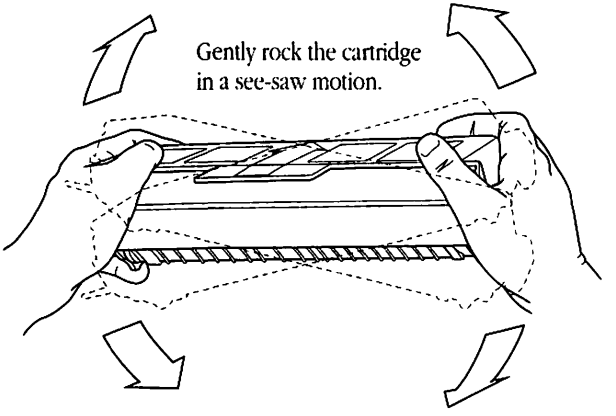

3. **Grab the tape tab and remove the tape.**

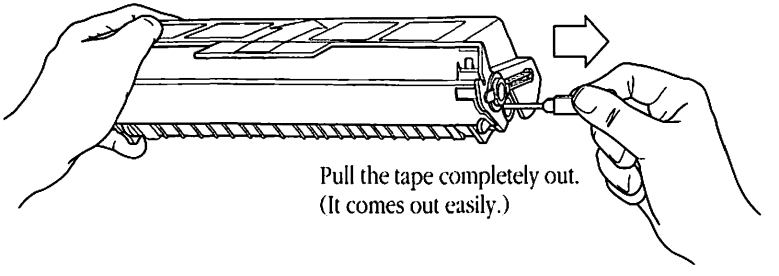

4. **Insert the cartridge into the LaserWriter printer.**

Line up the arrow on the cartridge with the arrow inside the LaserWriter.

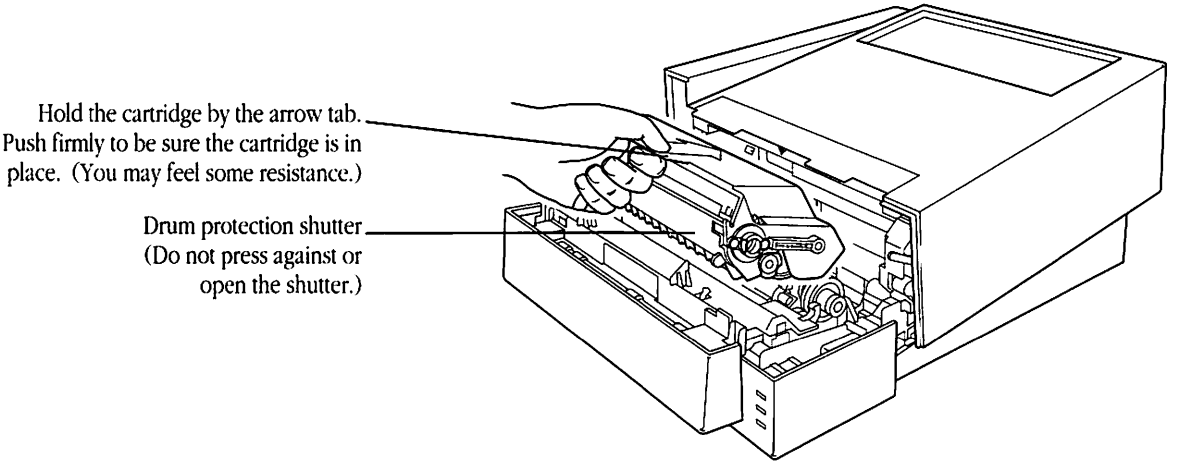

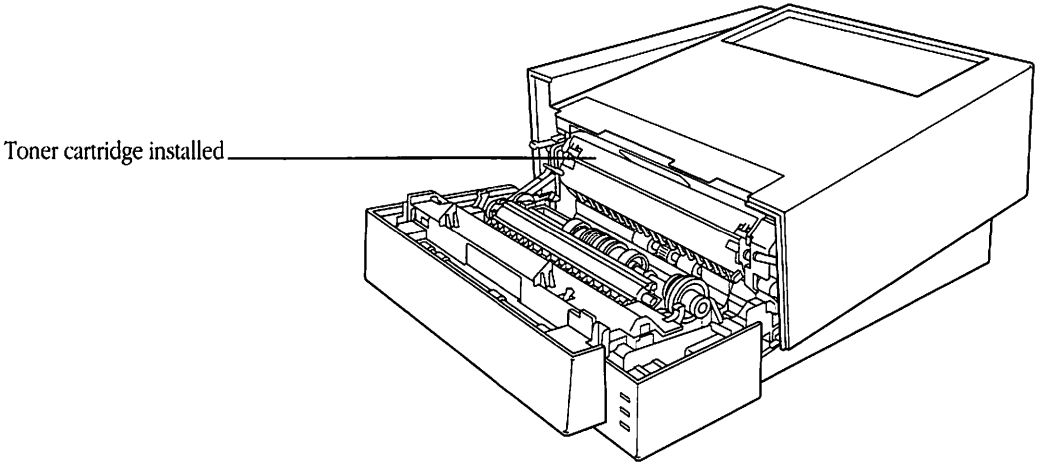

5. **Close the access door.**

If the door will not shut, the gears may not have meshed properly to receive the toner cartridge. See "Access Door Won't Shut" in Chapter 5, "Troubleshooting."

Once you've installed a new toner cartridge, there is a simple cleaning procedure you must perform. To do this you print a document named Cleaning Page using a program called TeachText. You'll find both the Cleaning Page and TeachText on the *Personal LaserWriter LS Installation* disk, or you may already have copied them to your hard disk.

6. **Select the document named Cleaning Page and choose Print from the File menu.**

   Make sure there is paper in the multipurpose tray.

7. **In the dialog box that appears, click OK.**

   The Cleaning Page prints. In the next steps, you'll print it again on the back side of the page.

8. **Place the printed page face up in the multipurpose tray.**

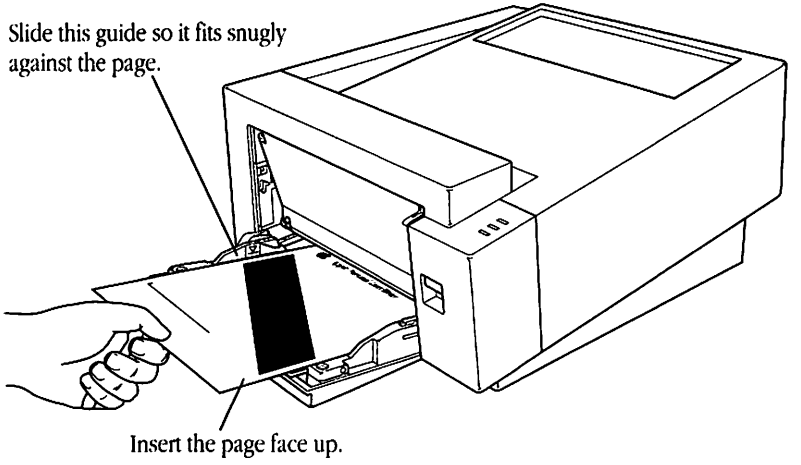

9. **With the Cleaning Page selected, choose Print from the File menu.**

10. **In the Print dialog box, click Multipurpose Tray, then click OK.**

That's all there is to it! Discard the printed page.

Refilling the multipurpose tray

The multipurpose tray holds up to 70 sheets of paper. When there is no paper left in the tray, the Paper Out light will come on.

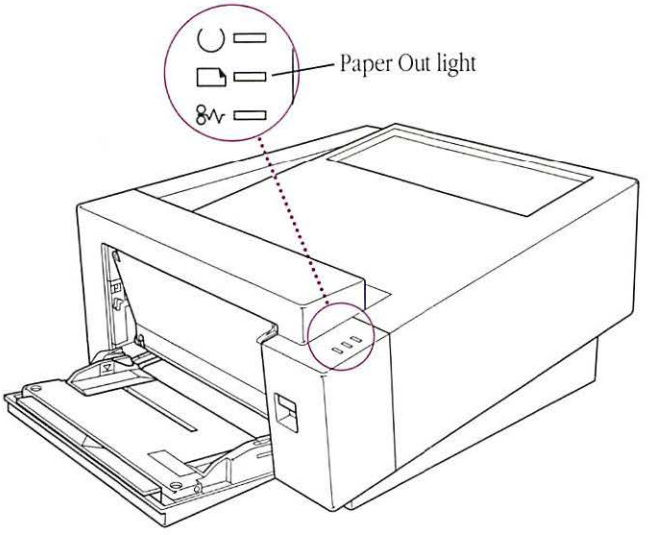

1. **Adjust the multipurpose tray extension to suit your needs. (Your paper should rest on the tray without sticking out over the edge.)**

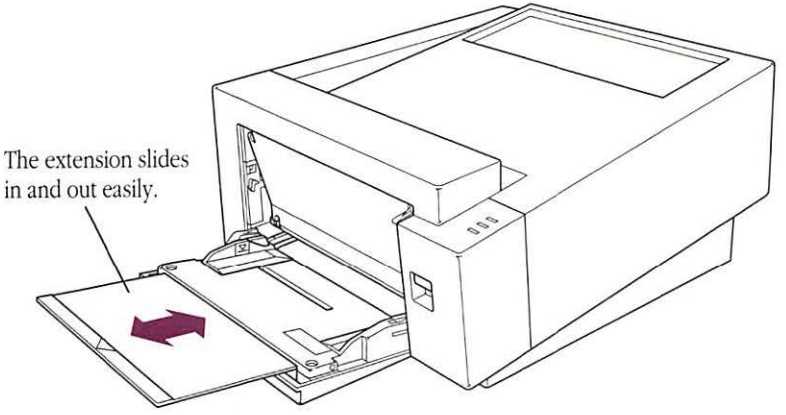

2. Refill the multipurpose tray.

The next three illustrations will help you orient paper and envelopes correctly in the multipurpose tray.

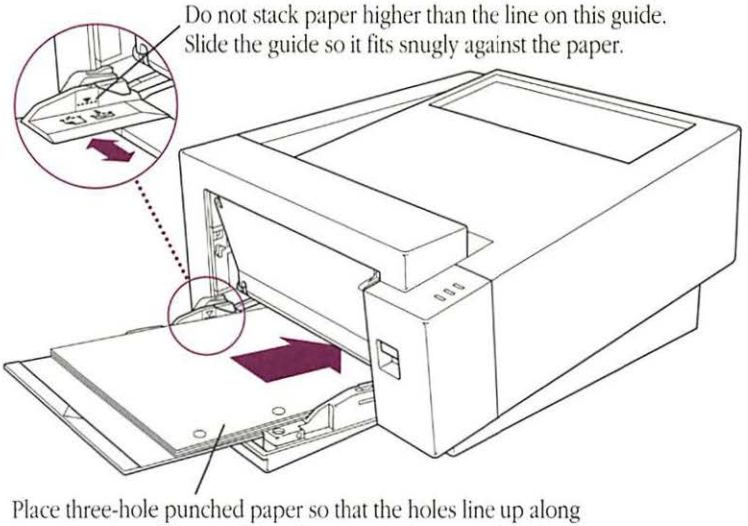

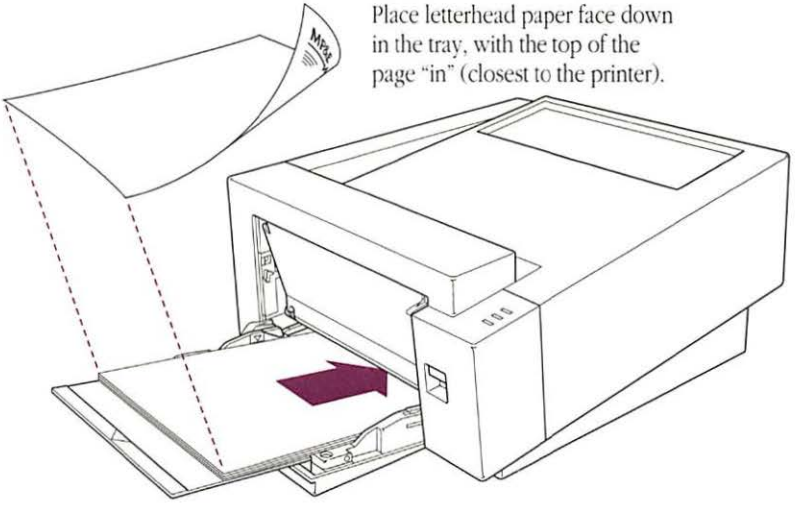

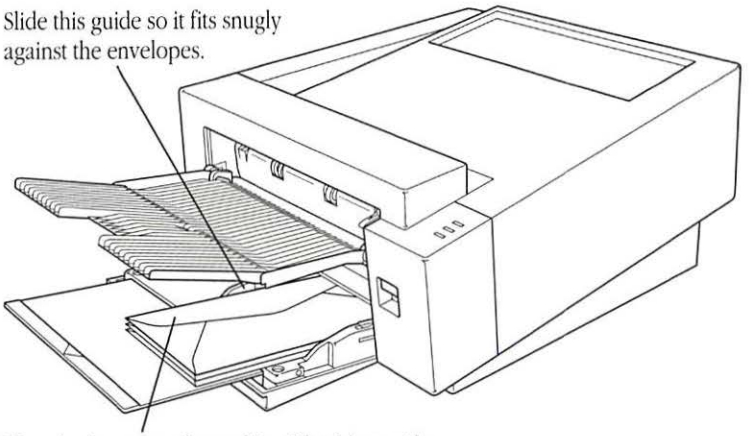

Place business envelopes (No. 10) address side down, with the flap toward the center of the tray.

Cleaning the exterior

Before you clean the LaserWriter printer, turn it off and unplug the power cord. Then wipe the exterior of the printer with a clean, soft, damp cloth. Use a mild soap or detergent if necessary, but *never* ammonia-based or alcohol-based cleaners. Be careful not to get any liquid in the power cord receptacle.

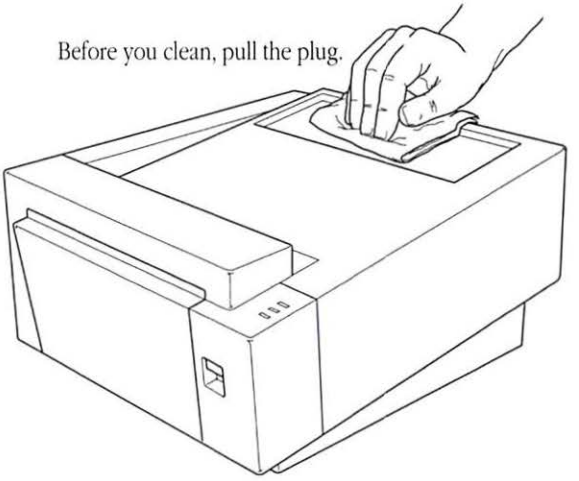

▲ Warning: Never use ammonia-based or alcohol-based cleaners on or around the LaserWriter printer. ▲

Troubleshooting

This chapter provides solutions to some common problems that you might encounter while using your LaserWriter printer.

In general, as long as you follow the maintenance instructions in Chapter 4, you're not likely to have any problems with your LaserWriter printer. The most common source of trouble is faulty software installation, which you can avoid by carefully following the instructions in "Installing the Printer Files" in Chapter 2.

▲ **Warning:** If you have a problem with your Personal LaserWriter LS printer and nothing presented in this chapter solves it, take the printer to your authorized Apple dealer. Attempting to repair the printer yourself may void the Limited Warranty. Contact your authorized Apple dealer for additional information about this or any other warranty question. ▲

Safety first

Follow these safety tips to avoid damage to the LaserWriter printer and harm to you and other users.

The fixing assembly in the LaserWriter operates at very high temperatures. Be careful while performing routine maintenance and troubleshooting chores. Do not touch the fixing assembly.

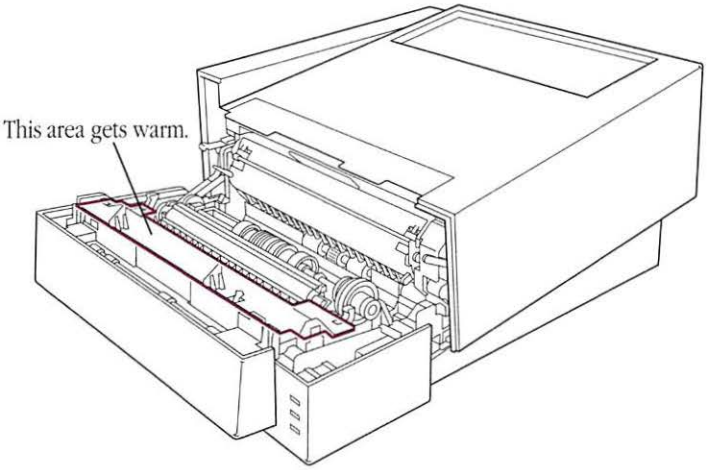

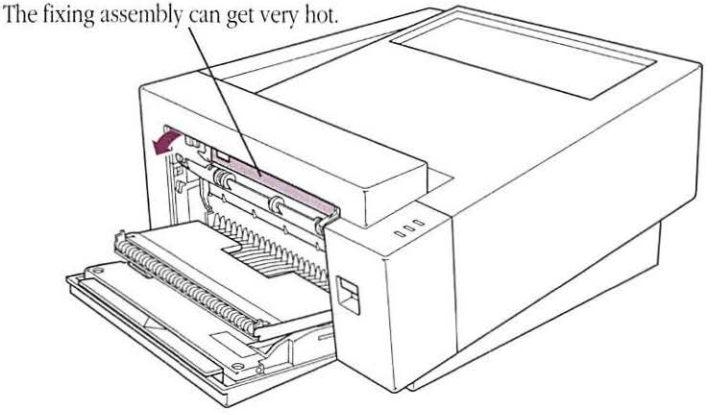

Chooser problems

You use the Chooser desk accessory to identify the printer you intend to use.

The Chooser doesn't show the LaserWriter printer icon

If the LaserWriter icon is missing from the box that identifies different printer types, you probably need to install the appropriate printer software in your System Folder.

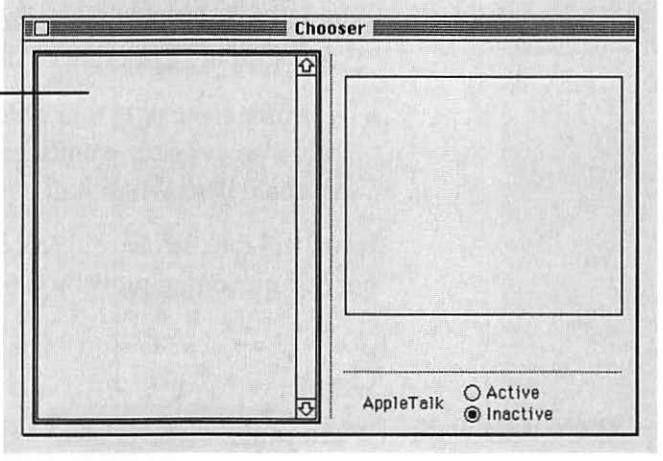

To install the software, you must follow the instructions in Chapter 2, "Installing Printer Software." Then make sure you select the printer, as explained in "Choosing a Printer" at the beginning of Chapter 3.

The Macintosh doesn't recognize the LaserWriter

If you have selected the Personal LaserWriter LS printer icon in the Chooser, but nothing prints or you get a message that there is no Personal LaserWriter LS, one of the following may be the cause:

- The printer has been turned off. Make sure it is plugged in and turned on.
- In the Chooser, you may have chosen the wrong printer or selected the wrong port (the modem port instead of the printer port, or vice versa). Select the correct Chooser options as described in "Choosing a Printer" at the beginning of Chapter 3.
- There's a loose plug somewhere. Check to make sure that all the cables are properly connected. See Chapter 1, "Setting Up the Personal LaserWriter LS."

If you still can't resolve the problem, the printer's electronics may not be functioning properly. Contact your authorized Apple dealer.

Some text changes to the Geneva font

When you run low on memory, TrueType turns itself off and some TrueType fonts may be displayed and printed in the Geneva font. See the reference book that came with your Macintosh for suggestions on how to free up memory. You can also see your Apple dealer about installing more memory in your Macintosh.

Even if you do run low on memory, you can prevent the fonts from changing to Geneva by making sure you've installed fixed-size versions of your TrueType fonts.

The LaserWriter won't print a particular document

If you attempt to print a document but no page appears, try the following steps:

1. **Check for messages on your Macintosh screen.**
2. **Repeat the printing process.**

   Select the Personal LaserWriter LS in the Chooser, and respond to any dialog boxes; choose Print from the File menu and confirm the settings in the Print dialog box.

3. **Check the status lights.**

   If the printer is out of paper, see "Refilling the Multipurpose Tray" in Chapter 4.

   If the Paper Jam light is lit, see "Paper Is Jammed," later in this chapter.

   See Appendix A for more information about status lights.

A particular page won't print

If a page contains a lot of information, such as complex, detailed graphic images, you may see a message informing you that the LaserWriter has run out of memory and cannot print the page. Although it can print the other pages in the document, it can't print the complex page.

If possible, remove some of the information from that page (or spread the information over two pages) and try again to print it. If you encounter the "out of memory" message frequently, consider having your authorized Apple dealer install additional memory. (See Appendix F, "Upgrading the LaserWriter.")

Alternatively, you may be able to print a half-sized reduction of the page. Copy the information from the troublesome page and paste it in a new document. Choose Page Setup from the File menu and click the 50 percent option, then print the document.

Paper is jammed

Occasionally a piece of paper may get stuck inside of the printer during the printing process. Here's how to clear a paper jam:

1. **Open the printer to see where the jam is.**
2. **Clear the jam.**

The next four illustrations will help you find and remove the paper.

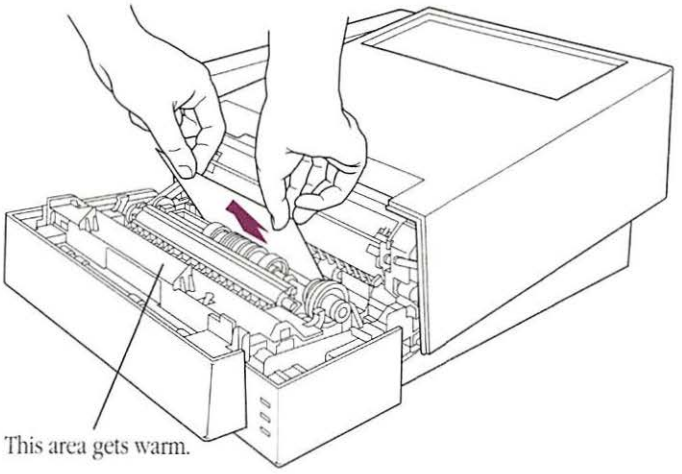

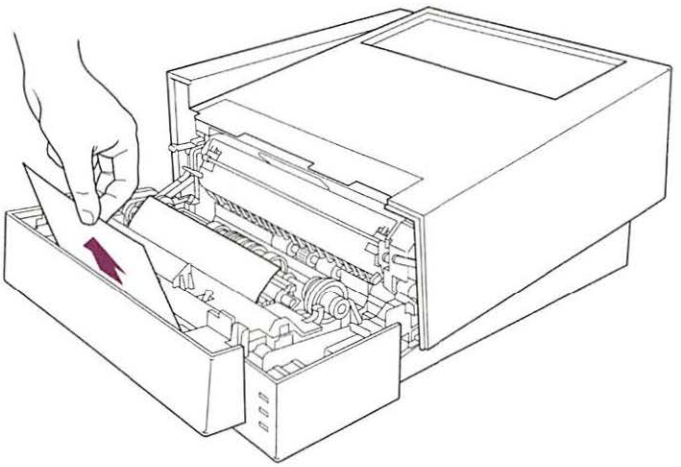

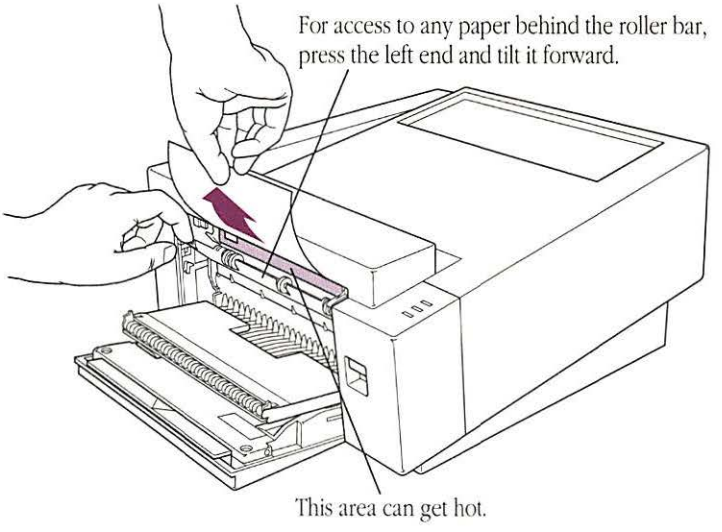

If you have the optional feeder and a paper (or envelope) cassette, be sure to check the cassette for jammed paper.

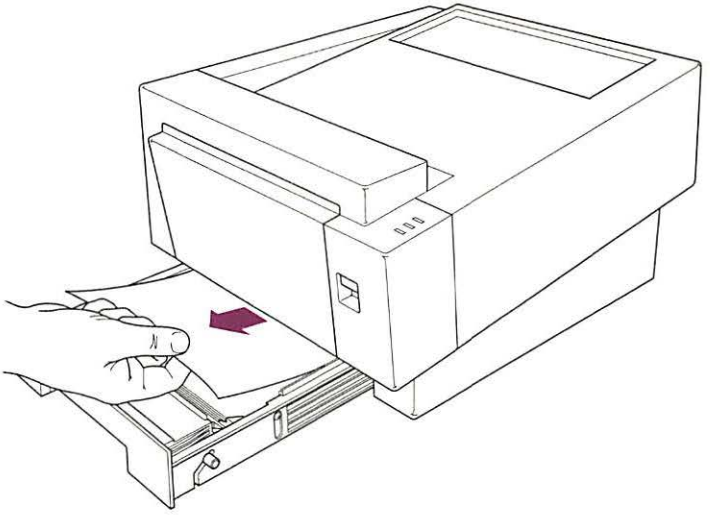

Paper feeds improperly

If paper tears, gets skewed, or comes through the printer crumpled, it may not be entering the printer properly.

1. **Try to recover any torn or otherwise damaged pieces of paper from inside the printer.**

   See the previous section, "Paper Is Jammed."

2. **Pick up the paper in the multipurpose tray, and flip the stack over.**

   Most paper has one side that prints better. Try flipping the paper to see whether that improves paper feeding. You can also try fanning the paper, in case some of the sheets are stuck together.

3. **Make sure the stack of paper lines up evenly.**

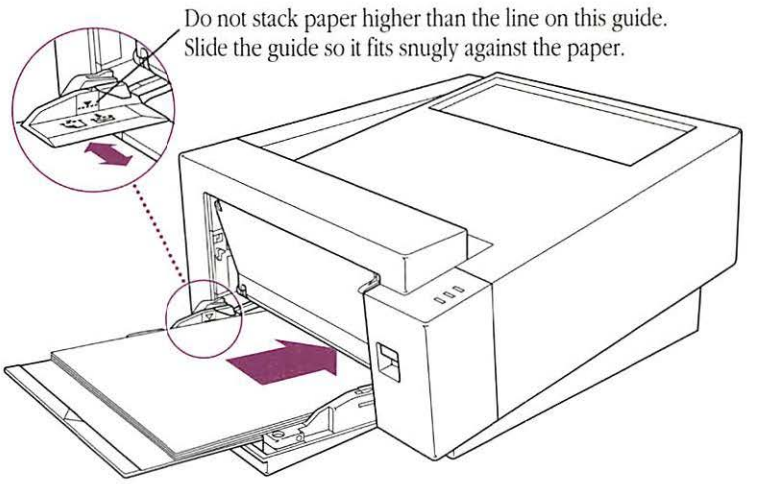

All the status lights are off

If all the status lights are off, check to make sure the power cord is plugged in properly. Also make sure the printer is turned on. If the lights stay off, try printing a page. If all the lights are still off after you've printed a page, contact your authorized Apple dealer and describe the situation.

Image problems

Most of these result from problems with the toner cartridge or with your choice of paper.

Here is a list of papers to avoid:

- Extremely slick or shiny paper
- Paper that is highly textured
- Coated paper
- Damaged or wrinkled paper
- Stapled paper
- Multipart forms
- Letterhead paper that was printed using low-temperature dyes or thermography. (Such materials can peel away from the paper or melt inside the LaserWriter and cause damage.)

Image is too light or too dark

If printing is too light or too dark, try the following:

- Take out the toner cartridge and rock it gently to distribute toner. If this doesn't help, you may need to replace the cartridge. See "Replacing the Toner Cartridge and Using the Cleaning Page" in Chapter 4 for instructions.
- Adjust the print density setting to make the image you print lighter or darker. The **print density control** is just above the toner cartridge. To reach the control, open the LaserWriter as described in "Replacing the Toner Cartridge and Using the Cleaning Page" in Chapter 4.

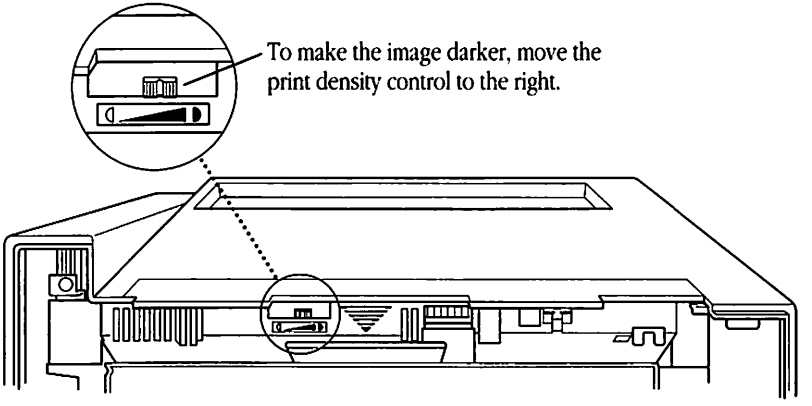

- If the problem occurs on nonstandard paper, try printing on the recommended 20-lb. photocopy or typewriter bond paper. If print quality improves, that means the toner does not adhere well to the nonstandard paper you were using.

Toner smears when rubbed

If the toner smears, you may be using nonstandard paper. Try printing on the recommended 20-lb. typewriter or photocopy bond paper.

A page prints solid black

If you try printing a document but get a solid black page out of the printer, you need to replace the toner cartridge. See "Replacing the Toner Cartridge and Using the Cleaning Page" in Chapter 4 for instructions.

A page prints off center or images are out of place

This problem may result from one of the following:

- You are not using the recommended paper (20-lb. typewriter or photocopy bond).
- The margins are set wrong in the document you are printing.
- If you have the optional paper cassette, make sure it's not too full and that the paper in it is arranged correctly. (See Appendix D, "Printing From the Optional Feeder and Cassette," for more information.)

Nothing prints on the paper

If you get a blank page, make sure that the protective sealing tape has been removed from the toner cartridge. (For details, see "Replacing the Toner Cartridge and Using the Cleaning Page" in Chapter 4.)

If the toner cartridge has been used for a long time, it may be nearly empty. Replace the cartridge.

Unwanted lines or stripes appear

If white or dark lines appear on the page, try the following:

- Remove the toner cartridge and rock it to redistribute the toner. Be sure to hold the cartridge horizontally.

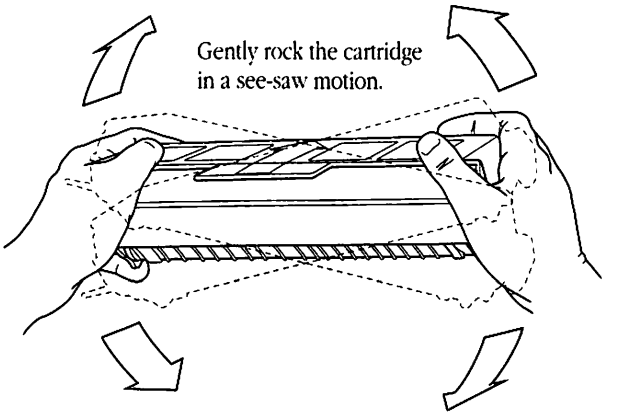

- If redistributing the toner doesn't work, install a new toner cartridge. See "Replacing the Toner Cartridge and Using the Cleaning Page" in Chapter 4.

The printer only prints on part of the paper

Make sure that you have selected the appropriate paper size in the Page Setup dialog box.

Toner may need to be redistributed. Remove the toner cartridge and gently rock it from side to side to redistribute the toner. Then put the cartridge back in place.

Stains appear on the backs of printed pages

If stains appear on the backs of printed pages, use the Cleaning Page to clean excess toner from the interior of the LaserWriter. To do this you print a document named Cleaning Page using a program called TeachText. You'll find both the Cleaning Page and TeachText on the *Personal LaserWriter LS Installation* disk, or you may already have copied them to your hard disk.

1. **Select the document named Cleaning Page and choose Print from the File menu.**

   Make sure there is paper in the multipurpose tray.

2. **In the dialog box that appears, click OK.**

   The Cleaning Page prints. In the next steps, you'll print it again on the back side of the page.

3. **Place the printed page face up in the multipurpose tray.**

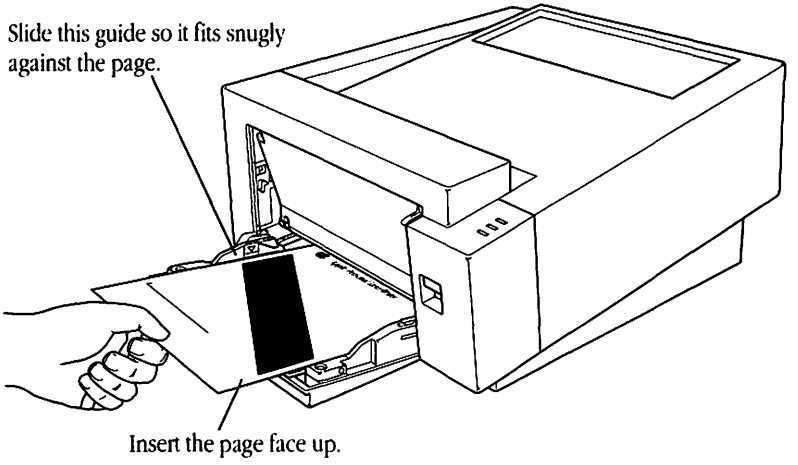

4. **With the Cleaning Page selected, choose Print from the File menu.**

5. **In the Print dialog box, click Multipurpose Tray, then click OK.**

That's all there is to it! Discard the printed page.

Image prints wavy or distorted

Wavy or distorted images usually mean your LaserWriter requires service. Contact your authorized Apple dealer.

Documents are not being delivered to the face-up tray

If the face-up tray is open but printed pages are not being delivered to it, you need to reset the tray. Simply close and then reopen the tray. For detailed instructions, see "Closing the Face-Up Tray" and "Choosing Face-Up Delivery" in Chapter 3.

Access door won't shut

If you are unable to shut the access door, the toner cartridge may not be seated properly. (There are some gears involved, and on rare occasions they don't mesh.) To fix the problem, follow these steps:

1. **Open the access door.**
2. **Pull the toner cartridge out of the printer.**
3. **Push the colored button inside the printer and hold it down as you insert the toner cartridge.**

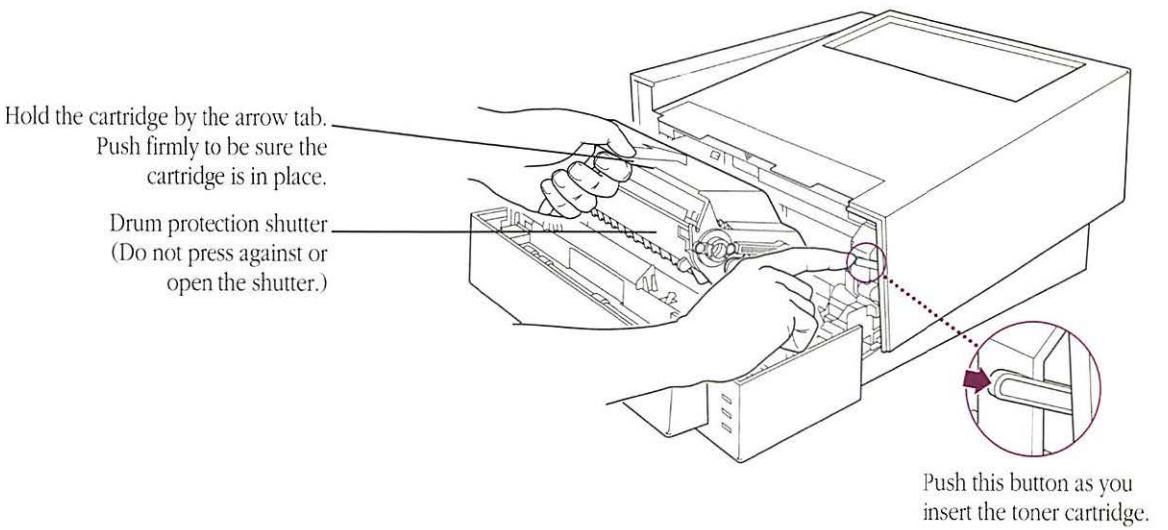

4. **Close the access door.**

Ports and Status Lights

Ports

The Personal LaserWriter LS has one serial port for connecting to the Macintosh.

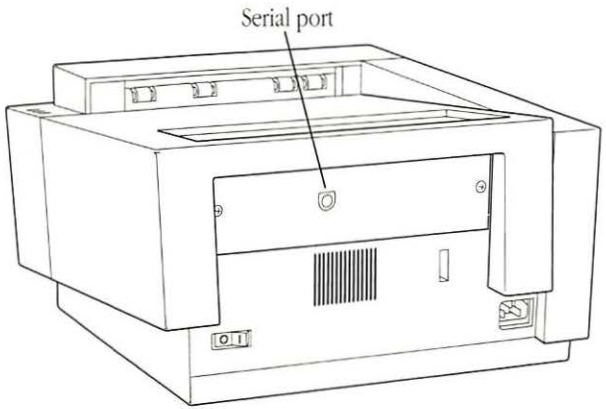

Status lights

There are three status lights on the front panel of the Personal LaserWriter LS.

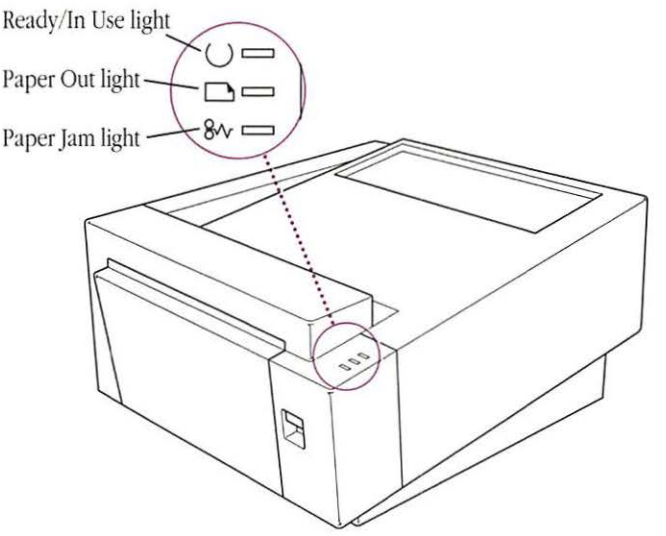

- The Ready/In Use light flashes while printing. Otherwise it glows green steadily (unless there is a paper problem).
- The Paper Out light glows steadily when there's no paper in the specified tray or cassette.
- The Paper Jam light glows steadily when there is a paper jam and continues to glow until the jam is cleared.

❖ *If the status lights are off:* See Chapter 5, "Troubleshooting." ❖

Specifications

Marking engine	Canon LBP-LX laser-xerographic.
Printer RAM	The LaserWriter contains 512K of RAM, which can be upgraded to 1 MB.
Print quality	300 dots per inch for text and graphics.
Printer fonts	TrueType font families standard. The LaserWriter supports printing in plain, bold, italic, and bold italic, with additional styles depending on the application program.

Additional fonts	The LaserWriter can support additional fonts from Apple and from other suppliers.
Speed	Four pages per minute maximum. Actual speed depends on the images printed and the computer used.
Interface	Serial, externally clocked.
Recommended duty cycle	Minimum life expectancy is 150,000 pages, with no monthly page limit.
Paper feed	Manual or automatic (up to 70 sheets or 5 envelopes) with multipurpose tray. Automatic with optional feeder and paper cassette (up to 250 sheets).
Printing materials	Apple recommends 20-lb. photocopy or typewriter bond (75 g/m^2). You can use 16-lb. (60 g/m^2) to 28-lb. (105 g/m^2) paper. Accepts most letterhead and colored stock. Accepts medium-weight photocopier transparencies. Print labels from the multipurpose tray using manual feed. Use envelopes recommended for laser printers. Print envelopes from the multipurpose tray with automatic or manual feed or automatically if you have the optional paper cassette installed.
Paper sizes and capacity	Supports U.S. letter, U.S. legal, A4, B5 (JIS), and envelopes. The multipurpose tray can hold up to 70 sheets of 20-lb. (75 g/m^2) paper. The optional paper cassette supports the same sizes and can hold up to 250 sheets of 20-lb. (75 g/m^2) paper. The multipurpose tray can hold up to 5 envelopes. The optional envelope cassette holds up to 15 envelopes. Use only envelopes whose size falls within these ranges: ■ Minimum: 86 x 178 mm (3.5 x 7 in.). ■ Maximum: 188 x 267 mm (7.4 x 10.5 in.).

Imageable area	Maximum printable line: 203.2 mm (8.0 in.). Minimum top and bottom margins: 6.35 mm (0.25 in.). Minimum left and right margins: 6.35 mm (0.25 in.).	
	With the optional paper cassette, the printer senses cassette size and adjusts to maintain these margins.	
	Actual imageable area may vary depending on the application program.	
	You must avoid printing beyond the margin to prevent depositing toner on the transfer roller or scraping toner from the drum. If this happens, use the Cleaning Page to remedy the problem. (See "Stains Appear on the Backs of Printed Pages" in Chapter 5.)	
Dimensions	Height	20.3 cm (8.0 in.)
	Width	38 cm (15 in.)
	Depth	46.4 cm (18.3 in.)
Weight	14.5 kg (31 lb.)	
Operating environment	Temperature 50° to 90° F (10° to 32° C)	
	Humidity	20 to 80 percent, noncondensing
	Toner cartridge transit environment	–4° to +104° F (–20° to +40° C)
Input electrical requirements	U.S./Japan	110–115 V (± 10%), 50–60 Hz (± 2 Hz)
	Europe/Australia	220–240 V (± 10%), 50 Hz (± 2 Hz)
Power consumption	Operating	600 W maximum at 115 V 550 W maximum at 220

Ozone emission

Ozone gas is emitted by almost all laser printers and photocopiers. Because ozone can be an irritant, the U.S. Occupational Safety and Health Administration (OSHA) specifies current workplace exposure levels for ozone. Other countries may have similar regulations. The Personal LaserWriter LS printer produces undetectable quantities of ozone, far below the current limit specified by OSHA.

Working With Your LaserWriter Fonts

With your Macintosh and LaserWriter, you can produce finished, high-quality documents of many types—letters, memos, and charts, even brochures or advertisements. This appendix provides some examples of fonts you received with your LaserWriter printer.

The LaserWriter printer fonts

The font families that come with your printer should satisfy most of your printing needs.

Serif fonts

Although there are thousands of type designs, all Latin alphabet font families can be classified as either **serif** or **sans serif.**

Serifs, the strokes at the ends of letterforms, are not just for decoration. Serifs guide the eye along the printed line, increasing legibility.

Times and Courier are two serif fonts that come with the LaserWriter.

Times

The Times font family is a standard choice for newspapers and other periodicals. Attractive and easy to read, its compact design makes it ideal when space is at a premium. Here is the character set for 12-point Times.

abcdefghijklmnopqrstuvwxyz

ABCDEFGHIJKLMNOPQRSTUVWXYZ

`1234567890-=[];',./\

~!@#$%^&*()_+{}:"<>?|

åſçð´ƒ©˙^Δ°–µ~øπœ®ß†¨√∑≈¥Ω

ÅıÇÎ‰ÏÌÓÈÔ Ò˜ˆØ∏ŒÂÍÊËÒ„ÙÁÛ

`¡™£¢∞§¶•ª–≠‘“…æ≤≥÷«

Ÿ/¤‹›fifl‡°·‚—±”’ÚÆ¯¿»

Courier

Courier is a **monospaced** font. That is, each letter occupies the same amount of space on the line. When fonts are **proportionally spaced,** as with Times, different letters are assigned different spacing according to their size and shape.

Compare the lengths of the two strings shown here.

Courier:	iiii	mmmm
Times:	iiii	mmmm

Here is the character set for 12-point Courier.

abcdefghijklmnopqrstuvwxyz

ABCDEFGHIJKLMNOPQRSTUVWXYZ

`1234567890-=[];',./\

~!@#$%^&*()_+{}:"<>?|

åʃçð´ƒ©˙^Δ°¬µ~øπ®ß†¨√∑≈¥Ω

Å¹ÇÎ‰ÏÌÓÈÔ♉Ò˜ˆØ∏ÂÍÊËÒ„ÙÁÛ

`¡™£¢∞§¶•ª º–≠" '...≤≥÷«

Ÿ⁄¤‹ ›‡° ·‚—±"'Ú¯˘¿»

Courier is included in the LaserWriter font set because some programs will not print using other fonts, and because it is widely used for computer code. It's also the right choice if you want your correspondence to look as if it were produced on a typewriter.

Sans serif fonts

Sans serif means "without serifs." These fonts are characterized by simple, striking lines that make them particularly appropriate for titles and headings, or wherever large type is needed. They are also well adapted to spreadsheets and charts. Some designers like the clean, modern look they give to text, but the serif styles are probably more readable in large blocks of text.

Helvetica is a sans serif font that comes with your LaserWriter.

Helvetica

Helvetica is probably the most widely used sans serif design in the world. Here is the character set for 12-point Helvetica.

abcdefghijklmnopqrstuvwxyz

ABCDEFGHIJKLMNOPQRSTUVWXYZ

`1234567890-=[];',./ \

~!@#$%^&*()_+{}:"<>?|

åſçð´ƒ©˙^Δ˚–µ~øπœ®ßẗ√∑≈¥Ω

ÅıÇÎ‰ÏÌÓÈÔ◆Ò¯ˆØ∏ŒÂÍÊË◊„ÙÁÛ

`¡™ £¢∞§¶•ª º–≠“‘…æ≤≥÷«

Ÿ/¤‹›fifl‡°·‚—±”’ÚÆ¯¿»

Specialty fonts

Symbol, a specialty font, also comes with your LaserWriter.

Symbol

The Symbol font is most useful if your work involves science or mathematics. Here is the character set for 12-point Symbol.

αβχδεφγηιφκλμνοπθρστυϖωξψζ

ΑΒΧΔΕΦΓΗΙϑΚΛΜΝΟΠΘΡΣΤΥςΩΞΨΖ

1234567890–=[];∏,./∴

~!≅#∃%⊥&*()_+{}:©<>?|

≡ ∂↔⊗♥ |⊥∅⌋ℜ∝~↵≠∉ ♦♣ ←℘•⊕×|

⌡ ⌊™⌠⌡ ⌊⌈ | ⌘⟩ |⌡↓÷∈ ∑| ⌠⌡·© || ⌠

ℑ♠≤′°/ƒ∞≈…∠↑®™⊃—″≥√∩

∧∨⇔⇐⇑⇒⇓◊ϒ⟨®∇±©∏∫→⌡ℵ∪

Sizes and styles

The TrueType fonts you received with your LaserWriter can be scaled to give you any size you want.

With almost all application programs, you can format any of these fonts into bold or italic. Some programs put additional styles at your disposal. As shown in the sample of Helvetica below, these may include

Helvetica bold italic

Helvetica shadow

Helvetica underline

Helvetica outline

Helvetica $_{\text{subscript}}$ and ^{superscript}

HELVETICA SMALL CAPS

Using Key Caps to see screen fonts

The Key Caps desk accessory lets you look at the characters in each of the screen fonts installed in your System file. This section tells you how.

1. **Choose Key Caps from the Apple menu.**

   The keyboard template that appears matches the layout of your keyboard.

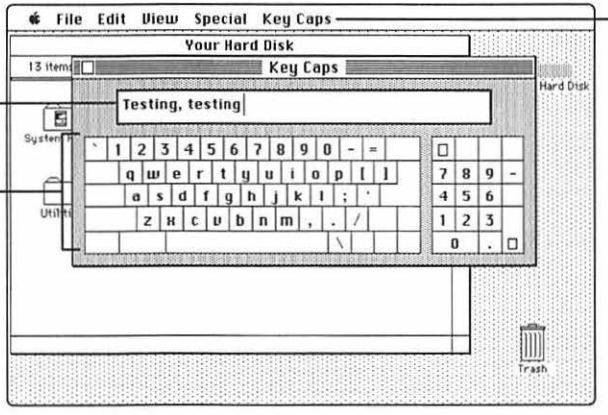

Text you type appears here and can be edited in the usual way.

The font displayed first is Chicago, used extensively by the Macintosh.

To see different characters, choose another font from the Key Caps menu. (The menu is a complete list of all the fonts in your System file.)

2. **Pull down the Key Caps menu and choose the font you wish to examine.**

3. **To try out characters, type on your keyboard or click Key Caps keys on the screen.**

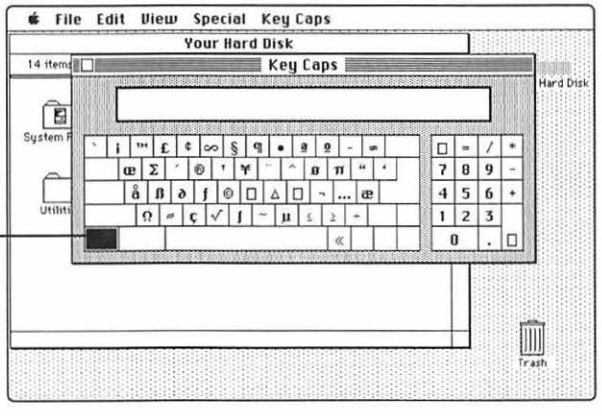

To see special characters, hold down the Option key or the Option and Shift keys.

Obtaining additional fonts

In addition to the fonts available from Apple, you can obtain TrueType and bitmapped Macintosh fonts from numerous software developers. You can choose from a wide variety of alphabet fonts, both Latin and non-Latin, symbol fonts for specialized purposes, and novelty fonts for display and decoration.

Commercial sources, shareware, and freeware

You can obtain new fonts from a wide variety of commercial sources. You can also choose from a huge array of public domain fonts. Some of these are **freeware.** You can use them with no obligation to anyone. Others are **shareware.** There is no purchase price, but if you continue to use the font, you're honor-bound to pay the developer either a stipulated fee or a donation.

Adding/removing fonts

Some fonts you obtain come with special instructions for installing them. Be sure to read any accompanying manuals.

If you have System 6, some fonts must be installed or removed with the Font/DA Mover. If you don't know how to use the Font/DA Mover, see the books that came with your Macintosh for detailed instructions.

If you have System 7, you install and remove fonts by dragging them in and out of the System file of your startup disk.

Printing From the Optional Feeder and Cassette

The dealer-installed optional feeder can give you additional flexibility. This appendix tells you how to load paper or envelopes into a cassette.

Loading the paper cassette

The optional paper cassette fits neatly into the feeder on the base of the printer. The cassette holds up to 250 sheets of paper and feeds the paper automatically.

1. Pull the paper cassette out.

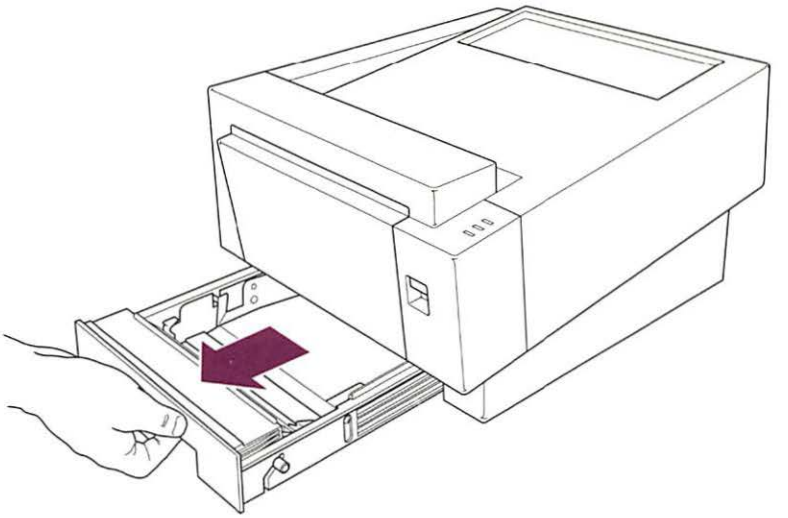

2. Load paper into the paper cassette.

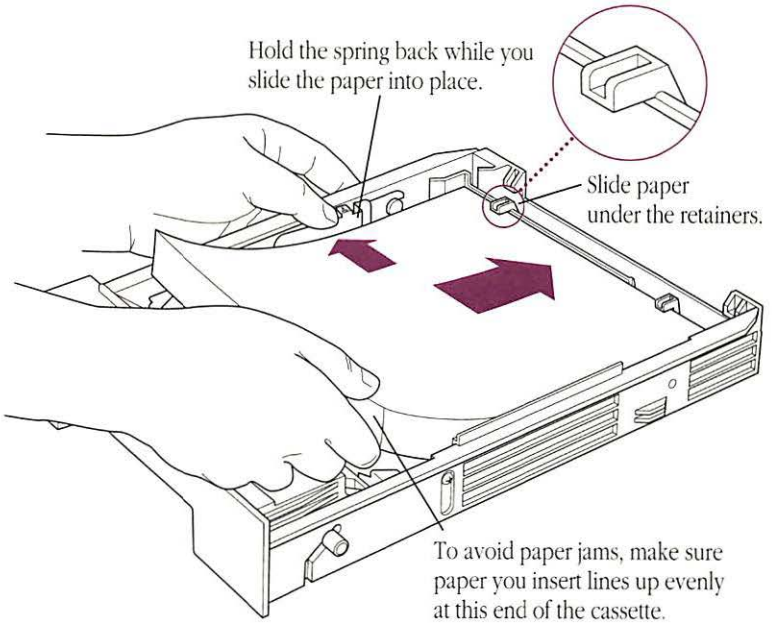

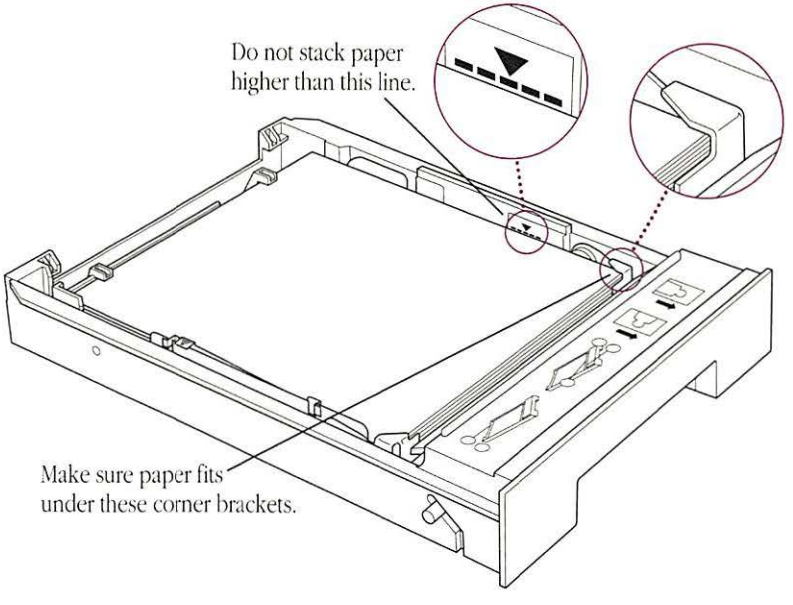

3. Slide the paper cassette back into place in the printer.

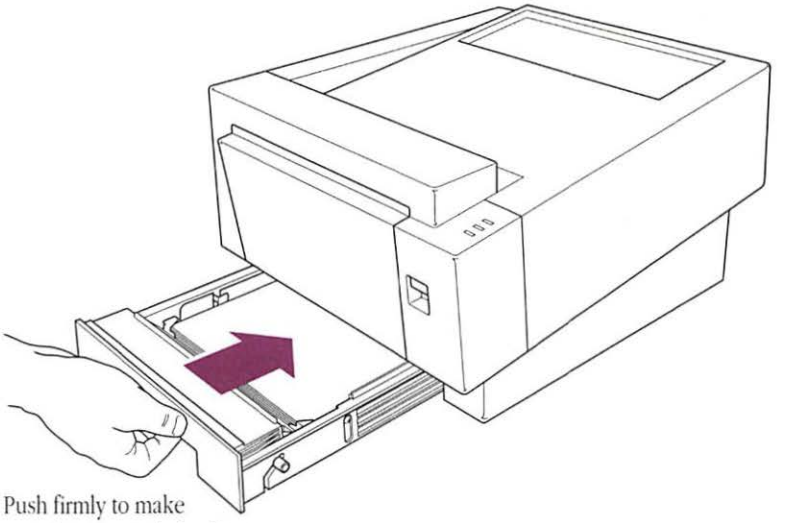

Push firmly to make sure the cassette is in place.

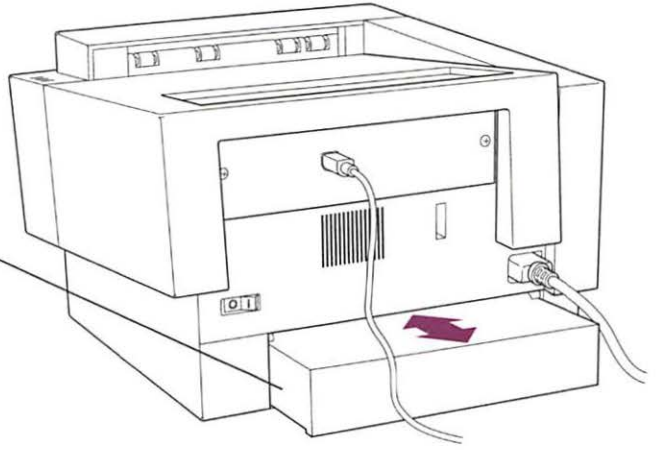

The optional U.S. legal cassette sticks out approximately 2 inches. (The standard U.S. letter cassette fits flush with the end of the printer.)

The paper cassette works best when you use 20-lb. typewriter or photocopy bond paper. Although 20-lb. paper is recommended, the cassette will accept 16-lb. to 28-lb. paper.

As long as the weight is acceptable, you can also use

- Three-hole punched paper
- Letterhead paper

Three-hole punched paper

You can print documents on paper that's three-hole punched (for use in a three-ring binder, for example).

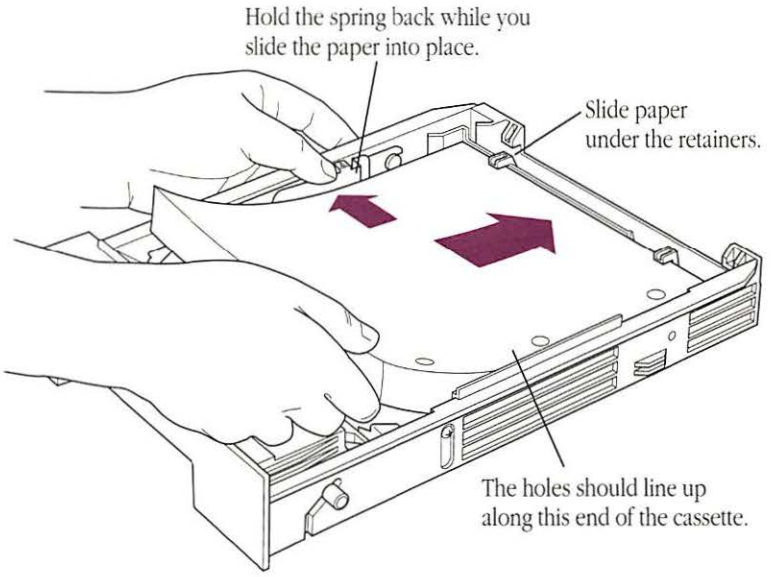

Letterhead paper

To dress up reports and letters, you can print on letterhead paper. Just make sure the weight of the paper is between 16 and 28 pounds—with 20-pound paper being the best choice.

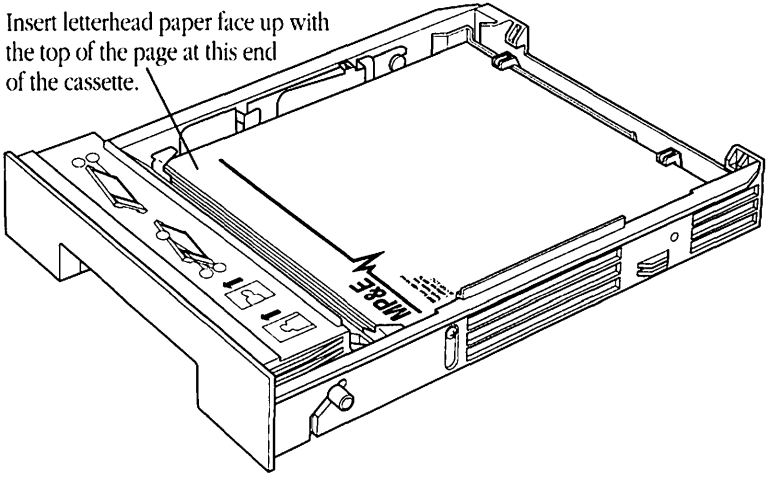

Loading the envelope cassette

The Personal LaserWriter LS printer lets you print on up to 15 envelopes automatically from the optional envelope cassette. Use only envelopes whose size falls within these ranges:

- Minimum: 3.5 x 7 inches (86 x 178 mm)
- Maximum: 7.4 x 10.5 inches (188 x 267 mm)

The weight and construction quality of envelopes can vary widely. While many envelopes work well with the envelope cassette and the LaserWriter printer, some do not. Before you buy large quantities of any envelope, print some samples to make sure they work well with the Personal LaserWriter LS.

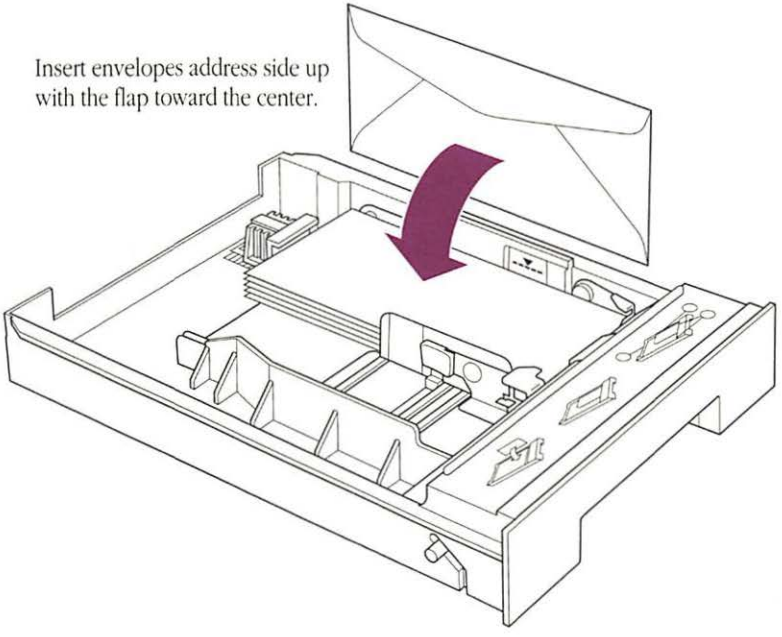

△ **Important:** When you print envelopes, you need to use the face-up delivery tray to receive the printed results. For instructions on opening the tray, see "Choosing Face-Up Delivery," in Chapter 3. △

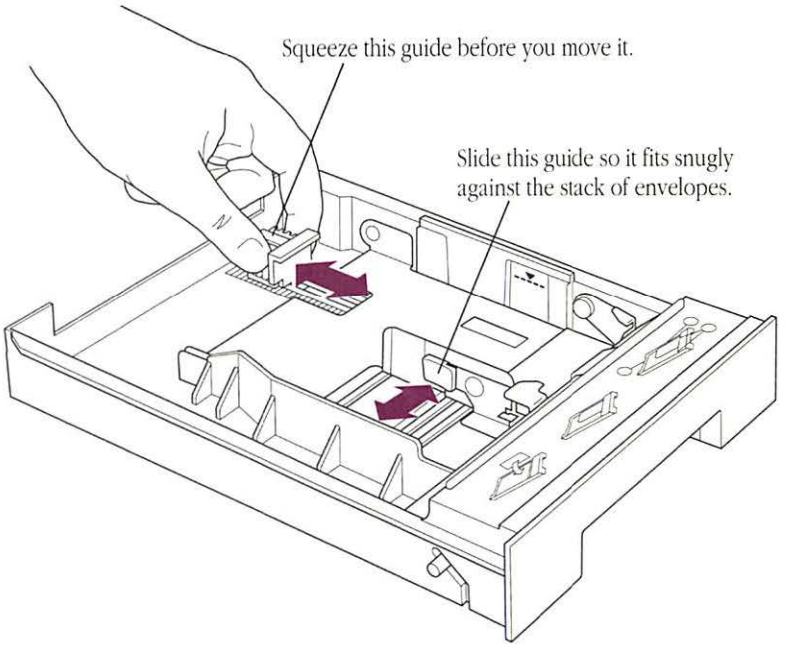

Before you print on envelopes, choose Page Setup from the File menu. (You need to modify your page setup to accommodate envelopes.)

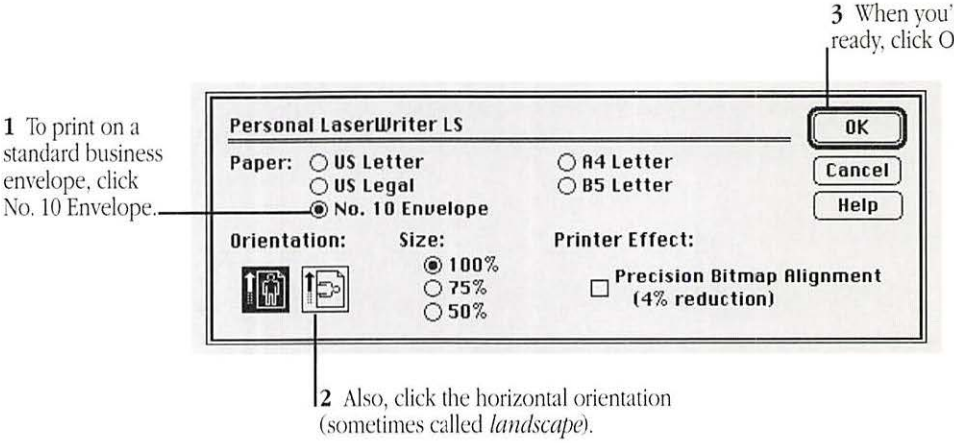

When you choose the Print command, make sure you click the Paper Cassette button in the Print dialog box.

How the LaserWriter Works

The Personal LaserWriter LS is a laser printer. It uses laser light, electric charges, and plastic toner powder to produce each finished page of text and graphics.

When you give the Print command on your Macintosh, the computer sends the information necessary to print each complete page through the connection to the printer. The LaserWriter then activates the laser.

Through a series of mirrors, the laser light is reflected onto a rotating photosensitive drum. The drum has a negative charge. When the laser light scans the drum, it gives what will turn out to be printed areas a neutral charge, leaving the surrounding areas negative.

The toner is also negatively charged. The drum rotates through it, and the toner particles stick to the neutral (black) areas but avoid the negative (white) areas.

Paper acquires a positive charge when it enters the printer. Opposites attract, so the negatively charged toner jumps onto the paper when the drum makes contact with it.

The paper then passes through the **fixing rollers,** which generate a temperature of about 350 degrees Fahrenheit (177 degrees Celsius) to fuse the image onto the paper.

Upgrading the Personal LaserWriter LS

The Personal LaserWriter LS can be upgraded to contain 1 MB of random access memory (RAM). This permits you to print even the most complex pages.

See your authorized Apple dealer or service provider for a RAM upgrade.

▲ **Warning:** Do not attempt to install additional RAM yourself. Doing so will void the warranty on your Personal LaserWriter LS printer. ▲

Other options for the Personal LaserWriter LS include:

- Paper Feeder
- Personal LaserWriter U.S. letter cassette
- Personal LaserWriter U.S. legal cassette
- Personal LaserWriter A4 cassette
- Personal LaserWriter B5 cassette
- Personal LaserWriter envelope cassette

Service and Support

To help you get the best performance from your system, Apple Computer has established authorized Apple dealers who offer full support. If you need answers to technical questions or information about product updates, your authorized Apple dealer can help you. Apple's technical support organization backs each dealer and international technical support group via an AppleLink® network, a state-of-the-art on-line electronic information service, to ensure prompt, reliable assistance.

Your dealer has the latest information on new hardware and software products as well as product updates. If you wish to upgrade your system, your dealer can help you select compatible components.

If your product requires service, your local authorized Apple dealer is trained and ready to support you. Apple provides factory-quality parts and the latest available diagnostic equipment to the more than three thousand authorized Apple service centers throughout the world. Apple guarantees parts and warranty labor. (Regulations in each country determine the length of warranty. Some restrictions may apply, depending on the country of original purchase.)

If for some reason you cannot return to the authorized dealer from whom you purchased your system, go to the nearest service location. For the location nearest you, in the United States or Canada, call or write to one of the following:

Apple Computer, Inc.
Customer Relations
20525 Mariani Avenue
Cupertino, CA 95014-6299
U.S.A.
(800) 538-9696

Apple Canada, Inc.
7495 Birchmount Road
Markham, Ontario, L3R 5G2
Canada
(800) 268-7796 or
(800) 268-7637

For locations in other countries, either call the Apple headquarters in your country or write to the United States address given above.

Apple also offers service plans designed to meet your needs. One of these is the AppleCare® Service Agreement (available in the United States, Canada, and Australia only), which extends full warranty coverage up to three years. Your AppleCare contract will be honored at any participating authorized Apple dealer within the country of purchase—an added benefit if you relocate. Local service means time saved in getting your Apple system back to work.

You can purchase AppleCare at any time, but it's a good idea to purchase it with your system, or at least before your warranty has expired, to avoid an inspection at your own expense.

Custom Installer Instructions

When you follow the instructions in Chapter 2, the Installer program installs the basic software necessary to print on a Personal LaserWriter LS from whichever Macintosh you are using.

By using the Installer's Customize function, you can do other sorts of installations as well.

Using the Customize feature

To use the Installer's Customize feature, follow these steps:

1. **Insert the *Personal LaserWriter LS Installation* disk.**
2. **Open the disk by double-clicking its icon.**
3. **Open the Installer by double-clicking its icon.**
4. **Click the Customize button.**

   A special customization dialog box opens, as shown in the next step.

5. Select the items you wish to install by clicking or shift-clicking.

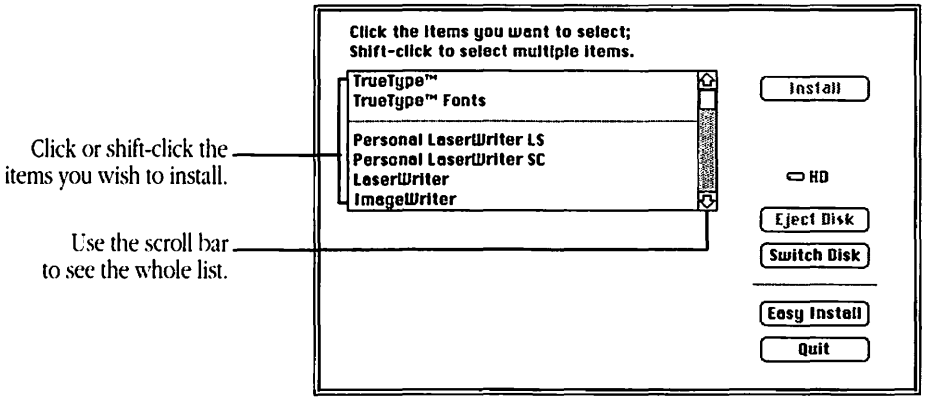

Use the scroll bar to see all the choices. If you wish to install only one item, click it. If you wish to select more than one item, hold down the Shift key while clicking each item separately.

See the next section, "What You Can Install," for a description of the different options.

6. Click Install.
7. Swap disks as requested.
8. When the Installer is finished, click Restart.

The installation is complete.

What you can install

The special customization dialog box lists all the different items you can install. These fall into several groups, as follows.

Software for different printers

If you have other printers besides the Personal LaserWriter LS, you must select the name of the printer in the customization dialog box. The choices offered include

- Personal LaserWriter SC
- ImageWriter® II
- AppleTalk ImageWriter, for ImageWriter II printers connected over a network
- ImageWriter LQ
- AppleTalk ImageWriter LQ, for ImageWriter LQ printers connected over a network
- LaserWriter, for any LaserWriter except the LaserWriter IISC, the Personal LaserWriter SC, or the Personal LaserWriter LS
- Personal LaserWriter LS, which is automatically installed if you follow the procedure in Chapter 2

TrueType fonts

If you follow the installation instructions in Chapter 2, the TrueType fonts that come with the Personal LaserWriter LS are automatically installed. If you need to install them again, you can either use the Font/DA Mover (in System 6), drag the fonts to the icon of your System Folder (in System 7), or select the TrueType Fonts item in the customization dialog box.

If you're using System 6, you also need to have the TrueType file in your System Folder.

Software for the Macintosh IIfx with System 6

The Macintosh IIfx using System 6 requires a special piece of software called the Macintosh IIfx Serial Switch. If you have a Macintosh IIfx and you follow the instructions in Chapter 2 using your Macintosh IIfx, this software will automatically be installed.

However, in the rare event that you install the software for your Macintosh IIfx on a different model Macintosh, you must choose the Macintosh IIfx Serial Switch item in the customization dialog box.

A

access door The door at the front of the printer that you open to install a toner cartridge.

B

bitmap A dot-by-dot representation of a text character or graphic image.

C

camera-ready Ready for offset reproduction with no modification.

choose (1) To pick a command from a menu. (2) To designate a printer in the **Chooser.**

Chooser A desk accessory that lets you print from any attached printer for which you have a printer resource on the startup disk. You also use the Chooser to designate the port to which a printer is attached.

Cleaning Page A document that comes on the *Personal LaserWriter LS Installation* disk that you print to clean the printer. You should use the Cleaning Page whenever you install a new toner cartridge.

current startup disk The disk that contains the system files the computer is currently using. The startup disk icon always appears in the upper-right corner of the desktop.

D, E

desk accessories "Mini-application programs" that are available from the Apple menu regardless of which application you're using—for example, the Scrapbook, Key Caps, and the Chooser.

desktop The Macintosh's working environment—the menu bar and the gray area on the screen. You can have a number of documents on the desktop at the same time.

device Frequently used as a short form of **peripheral device.**

dialog box A box that contains a message requesting more information from you. Sometimes the message warns you that you're asking your computer to do something it can't do or that you're about to destroy some of your information. In these cases the message is often accompanied by a beep.

disk space The amount of space available on a disk for storing or processing a document or application.

display What you see on the screen of your computer.

document Whatever you create with application programs—a file you can open, modify, view, or save. Compare **file.**

double-click To position the pointer where you want an action to take place, and then press and release the mouse button twice in quick succession without moving the mouse.

drag To position the pointer on something, press and hold the mouse button, move the mouse, and release the mouse button. When you release the mouse button, you either confirm a selection or move an object to a new location.

F

face-up delivery tray The tray at the front of the Personal LaserWriter LS that is opened for face-up collation or for printing on envelopes, transparencies, or sheets of labels.

file Any named, ordered collection of information stored on a disk. Application programs and operating systems are files. You also make a file when you create text or graphics, give the material a name, and save it on a disk; in this sense, synonymous with **document.**

Finder The application program that creates the desktop. You use it to manage documents and programs, and to get information to and from disks.

fixing rollers The rollers inside the Personal LaserWriter LS that fuse toner to paper.

font A collection of letters, numbers, punctuation marks, and other typographical symbols with a consistent appearance, size, and style.

Font/DA Mover An application program on the *Personal LaserWriter LS Installation* disk and on one or more fonts disks that allows you to add fonts to or remove fonts from a disk's System file.

font family A font in various sizes and styles.

font file A specific file used with the Font/DA Mover. You copy fonts to and from this file to the System file of the startup disk.

font size The size of a font of characters in points; equivalent to the distance between the ascent line of one line of text and the ascent line of the next line of single-spaced text. Examples of font sizes are 12-point and 18-point.

freeware Software that is available for anyone to use at no charge.

G

graphics (1) Information presented in the form of pictures or images. (2) The display of pictures or images on a computer's display screen. Compare **text.**

H

hard disk A disk made of metal and sealed into a drive or cartridge. A hard disk can store large amounts of information.

I, J, K, L

icon An image that graphically represents an object, a concept, or a message. For example, an unopened document often looks like a sheet of paper with a corner turned down.

install To add information to the System file or to add new system files, such as the Personal LaserWriter LS printer driver, to the System Folder of a startup disk.

M, N

monospaced font Any font in which each character occupies the same amount of space on the line. (*Mono* means one.) In Courier, for example, the letter *M* occupies the same amount of space as the letter *I*. Thus, *MMMMM* is the same width as *IIIII*. Compare **proportionally spaced font.**

multipurpose tray The tray at the front of the printer that you use to print envelopes, labels, and transparencies or to do manual feed printing.

O

open To make available. You open files or documents in order to work with them. When you double-click an icon, or select it and choose the Open command, you cause a window with the contents of that icon to come into view. You may then perform further actions in the window.

P, Q

peripheral device Any device (such as a printer) that you attach to your computer.

point A unit of measurement for sizing type. 12 points equal 1 pica, and 6 picas equal 1 inch; thus, 1 point equals 1/72 inch.

port A socket on the back of the computer or peripheral device where you can plug in a cable to connect to another computer or device, or to a network.

print density control A control on the inside of the Personal LaserWriter LS that allows you to vary the darkness of printing.

printer driver A program that translates the file you're printing into the language the printer understands. You cannot use a printer unless the correct driver is installed on the current startup disk.

printer software The software that controls the interaction of the computer and the printer. This includes the printer driver and the font software.

proportionally spaced font Any font in which different characters have different widths; thus, the space taken up by words having the same number of letters varies. For example, this letter *M* is wider than this letter *I*, so that *MMMMM* produces a wider string than *IIIII*. Compare **monospaced font.**

R

random-access memory (RAM) Memory in which information can be referred to in an arbitrary or random order. As an analogy, a book is a random-access storage device in that it can be opened and read at any point. RAM usually means the part of memory available for programs from a disk; the programs and other data are lost when the computer is turned off. A computer with 1 MB of RAM has 1024 kilobytes available to the user.

resolution The degree of precision with which an object is represented. A printer's resolution is determined by the number of dots per inch.

S

sans serif Without serifs. Helvetica is a sans serif font family. The Helvetica *M* looks like this: M. See also **serif.**

scanner A device that converts images into computer-readable form.

screen fonts The fonts you see on the Macintosh screen.

serif One of the lines that finish off the main strokes of a letter. The "feet" at the bottom of this letter *M* are serifs. See also **sans serif.**

shareware Software you can try out without purchasing, but which you are honor-bound to pay for if you continue to use.

start up To get the system running. Starting up is the process of first reading the operating system program from the disk, and then running an application program.

startup disk A disk with all the necessary program files—such as the Finder and the System file contained in the System Folder—to set the computer into operation.

status lights Lights on the front of the Personal LaserWriter LS that indicate the status of the printer—on, paper jam, processing a job, and so on.

style A stylistic variation of a font, such as italic, underline, shadow, or outline.

system A coordinated collection of interrelated and interacting parts organized to perform some function or achieve some purpose—for example, a computer system comprising a processor, a keyboard, a monitor, and a disk drive.

T, U, V, W, X, Y, Z

text (1) Information presented in the form of readable characters. (2) The display of characters on a display screen. Compare **graphics.**

toner The plastic powder in the toner cartridge that serves as the "ink" in the LaserWriter.

toner cartridge A cartridge that contains the toner used in the printing process.

transfer roller The roller inside the printer that transfers toner to the paper.

A

access door 44
  opening 4
  problems closing 64
adding fonts 78
advice. *See* troubleshooting
air circulation requirements 2
APDA xiv
AppleCare 91
AppleLink 90
Apple menu
  Chooser desk accessory 24
  Key Caps desk accessory 77
automatic printing from multipurpose tray 30–32

B

background printing 24
backing up disks 14
bitmap 25
bitmapped fonts 20–22
bond. *See* paper

C

cable
  connections 10–11
  peripheral-8 3
cartridge, toner 3
  installing 5–7
  replacing 45–46
cassette. *See* envelope cassette; legal cassette; paper cassette
character sets. *See* fonts; Key Caps desk accessory; *and specific fonts*
charts, font for 74. *See also* fonts
Chooser desk accessory 24
  problems with printing 53–54
choosing
  face-up/face-down delivery 37–41
  fonts 72–76
  location for the LaserWriter 2
  printer, in Chooser 24
cleaning
  exterior 50
  print engine. *See* Cleaning Page
Cleaning Page
  installing 18–19
  using 47

closing
access door, problems with 64
face-up tray 40–41
commands. *See specific commands*
computer code, font for 73. *See also* fonts
connecting to a Macintosh computer 10–11
Courier font 73. *See also* fonts
curling, avoiding 34

D
dark images on page, troubleshooting 60
density control, print 60
desk accessories
Chooser 24, 53–54
Key Caps 77
dimensions 69
disks 3, 13–14
backing up 14
installation 13
locking 14
door, access 44
opening 4
problems closing 64
dots per inch (dpi) 67, 88
drum protection shutter 6, 44
duty cycle 68

E
electrical requirements 2, 69
engine, marking 67
envelope cassette 85–86
envelopes. *See also* paper
printing from envelope cassette 85–86
printing from multipurpose tray
automatic feed 32
manual feed 34
environment requirements 2, 69
equations, font for 75. *See also* fonts
exterior cleaning 50

F
face-up/face-down delivery 37–41
troubleshooting 64
face-up tray
closing 40–41
opening 37–39
feed. *See* loading; manual feed printing; paper feed, troubleshooting
File menu
Page Setup command 25, 86
Print command 26, 27
Finder 15
fixing assembly 52
fixing the printer. *See* troubleshooting
Font/DA Mover, deleting old versions 19
font families xiii. *See also* fonts
fonts 20–22, 68, 71–78. *See also* TrueType fonts
adding 68, 78
Key Caps desk accessory 77
monospaced 73
non-Apple 68, 78
problems with 54
proportionally spaced 73
removing 78
sizes 76
styles 76
formulas, font for 75. *See also* fonts
freeware 78. *See also* fonts

G
green status light 12, 66

H
hand feed. *See* loading; manual feed printing
headings, font for 74. *See also* fonts
help. *See* troubleshooting
Helvetica font 74. *See also* fonts
horizontal orientation 25

I
icons, Personal LaserWriter LS 24
  missing 53
imageable area 69
information
  problem-solving. *See* troubleshooting
  programming and technical xiv
ink. *See* toner cartridge
installation disks 13
Installer 16–17
  custom installation 92–96
installing
  Cleaning Page 18–19
  printer files 16–18, 92–96
  printer software 13–22, 92–96
  Serial Switch, for Macintosh IIfx and System 6 17, 96
  software for different printers 95
  toner cartridge 5–7
  TrueType fonts 16–18, 95
    in System 7 19
interface specifications 68
In Use light 12, 66

J
jam. *See* paper jam

K
Key Caps desk accessory 77. *See also* fonts *or specific font*

L
labels, printing 35
landscape orientation 25
LaserWriter printer, mechanics of 87–88
LED lights. *See* status lights *or specific status light*
legal cassette 82. *See also* paper cassette
letter cassette. *See* paper cassette
letterhead. *See also* paper
  printing from multipurpose tray 31
  printing from paper cassette 84
light images on page, troubleshooting 60
lights. *See* status lights
lines on page, troubleshooting 62
loading
  envelope cassette 85–86
  multipurpose tray 8–9, 31–32, 33–35
    envelopes 32
    labels 35
    letterhead 31
    three-hole punched paper 31
    transparencies 35
  paper cassette 80–84
    letterhead 84
    three-hole punched paper 83
  toner cartridge 5–7
location for printer, choosing 2
locking disks 14

M
Macintosh IIfx and System 6, installing Serial Switch for 17, 96
maintenance 43–50. *See also* troubleshooting
manual feed printing 33–36
marking engine 67
mathematics, font for 75. *See also* fonts
memory 67, 89
  out-of-memory message 55
menus/menu commands. *See specific menu or menu command*
modem port, connecting to Macintosh 10
monospaced fonts 73. *See also* fonts
MultiFinder 24
multipurpose tray 28–36. *See also* printing
  adjusting 29
  loading 8–9, 31–32, 33–35
  opening 28
  refilling 48–50

N
newspapers, font for 72. *See also* fonts

O
on/off switch 11
opening
  access door 4
  face-up tray 37–39
operating environment 2, 69
optional cassette. *See* envelope cassette; legal cassette; paper cassette
Orientation option (Page Setup) 25
outline fonts 20–22
overhead transparencies, printing 35
ozone emission 70

P
page orientation 25
Page Setup command (File menu) 25, 86
Page Setup dialog box 25, 86
paper 83–84. *See also* envelopes; loading
  loading cassette 80–84
  loading multipurpose tray 8–9
  refilling multipurpose tray 48–50
  specifications 68
  troubleshooting 56–64
  types to avoid 59
paper cassette 79–84
paper feed, troubleshooting 58
paper jam
  avoiding 34
  clearing 56–57
Paper Jam light 12, 66
Paper Out light 12, 66
paper, three-hole. *See* paper; three-hole punched paper
paper tray. *See* envelope cassette; legal cassette; multipurpose tray; paper cassette
parts list 70
periodicals, fonts for 72. *See also* fonts
peripheral-8 cable 3
  connections 10–11
Personal LaserWriter LS
  icon 24
    missing 53
  installation disk 16, 18, 93
  upgrading 89
Personal LaserWriter LS Installation disk 16, 18, 93
plugging in printer 11
plugs. *See* cable
port, LaserWriter 65
  connecting to Macintosh 10–11
portrait orientation 25
power consumption 69
power cord 3
power switch 11
Precision Bitmap Alignment option 25
Print command (File menu) 26, 27
print density control 60
Print dialog box 26, 27
print engine, cleaning. *See* Cleaning Page
printer
  choosing, in Chooser 24
  choosing location for 2
  connecting to Macintosh 10–11
  density control 60
  plugging in 11
  specifications 67–70
  turning on 11
printer files, installing 16–18, 92–96
printer fonts 67, 71–76. *See also* fonts
printer port, connecting to Macintosh 10
printer software 13–22, 92–96
printing 23–41. *See also* troubleshooting
  background 24
  envelopes 85–86
  from envelope cassette 85–86
  from the Finder desktop 27

printing *(continued)*
from multipurpose tray 28–36
automatic feed 30–32
envelopes 32, 34
labels 35
letterhead 31
manual feed 33–36
three-hole punched paper 31
transparencies 35
two-sided 36
from paper cassette 79–84
letterhead 84
three-hole punched paper 83
from within a program 26
imageable area 69
orientation 25
sideways 25
speed of 68
problems. *See* troubleshooting
programming information xiv
proportionally spaced fonts 73. *See also* fonts

Q
QuickDraw 87

R
radio and television interference x
RAM 67, 89
out-of-memory message 55
Ready/In Use light 12, 66
refilling multipurpose tray 48–50
removing
fonts 78
shipping retainers 5
repair 90–91
replacing toner cartridge 45–46

S
safety instructions xiv–xv, 44, 52
sans serif fonts 74. *See also* fonts
scalable fonts 20–22
screen fonts. *See also* fonts
serial port, LaserWriter 65
Serial Switch, for Macintosh IIfx and System 6 17, 96
serif fonts 72–73. *See also* fonts
service 90–91
setting up printer 1–12
shareware 78. *See also* fonts
shipping retainers, removing 5
shutting access door, problems with 64
sizes
of fonts 76
of paper 68
smears on page, troubleshooting 61
software
checking system version 14–15
installing printer 13–22, 92–96
system requirements 14
upgrading system 16
space requirements 2
specialty fonts 75. *See also* fonts
specifications 67–70
speed specifications 68
spreadsheets, font for 74. *See also* fonts
stains on page, troubleshooting 63
status lights 12, 66
troubleshooting 59
stock. *See* paper
stripes on page, troubleshooting 62
styles, of fonts 76
support 90–91
switch, on/off 11
Symbol font 75. *See also* fonts
System 7 19, 24, 78
system software
checking version 14–15
required version 14
upgrading 16

T

technical information xiv
television interference x
temperature requirements 2
three-hole punched paper. *See also* paper
  printing from multipurpose tray 31
  printing from paper cassette 83
Times font 72. *See also* fonts
titles, font for 74. *See also* fonts
toner cartridge 3
  installing 5–7
  replacing 45–46
toner smears on page, troubleshooting 61
transparencies, printing 35
tray, paper. *See* envelope cassette; legal cassette; multipurpose tray; paper cassette
troubleshooting 51–64
  distorted printing 64
  face-up delivery 64
  font changes to Geneva 54
  lines on page 62
  Macintosh can't find printer 54
  nothing prints 54, 55, 61
  out of memory 55
  paper feed 58
  paper jam 56–57
  printer icon missing in Chooser 53
  printing off center 61
  printing on part of paper 62
  printing solid black 61
  printing too dark 60
  printing too light 60
  stains on page 63
  status lights 59
  stripes on page 62
  toner smears on page 61
TrueType fonts xiii, 20–22. *See also* fonts
  installing 16–18, 95
    in System 7 19
turning on printer 11–12
two-sided printing 36
typefaces. *See* fonts
typewriter font 73. *See also* fonts
typewriter paper. *See* paper
typography. *See* fonts

U

U.S. legal cassette 82. *See also* paper cassette
U.S. letter cassette. *See* paper cassette
unpacking printer 3
upgrading Personal LaserWriter LS 89
using Cleaning Page 47

V

variable-size fonts 20–22
ventilation requirements 2
vertical orientation 25

W, X, Y, Z

warranty
  extending 91
  voiding 51, 89
weight specifications 69